YAMAHA

Electone ORGAN

GX-1

SERVICE MANUAL

NIPPON GAKKI CO., LTD.
Hamamatsu, Japan
SINCE 1887

INTRODUCTION

This manual contains service information for the Synthesizer Electone GX-1.
This model is the fully using sillicon transistors (NPN and PNP type) and Integrated Circuits (and or LSI). Take special care to the following points before making any service:

1) Check the main voltage and cycles of the organ and ascertain if they are correctly adjusted to the electric power supply in the area where the organ is used.
   If higher voltage is applied to the organ by mistake, transistors and or ICs will be inevitable distroyed.

2) Correct voltage and polarity should be observed when using a tester (VOM) in order to avoid damage to transistors, ICs and FETs.

3) Turn the organ off during disassembly and parts replacement. Recheck all work before applying power.
   Transistors and ICs are very unforgiving and destruction is immediate.

4) When replacing Integrated Circuit be very careful not to apply excessive heat, proper heat sinking devices should be used.

5) Before replacing an Integrated circuit, always disconnect its output connections and recheck for a signal.

INDEX

Page

GX-1 SPECIFICATIONS 1

GX-1 CIRCUIT DIAGRAM & CIRCUIT BOARD

Contents of Circuit Board 8

Unit Layout (1) 16

Unit Layout (2) 17

Block Diagram (Upper) 18

Block Diagram (Lower) 19

Block Diagram (Pedal) 20

Block Diagram (Solo) 21

Block Diagram (Rhythm) 22

Block Diagram (Pre. Amp.) 23

Terminal Function Table (M circuit) 24

M (Master Generator) Circuit Diagram 25

M Circuit Board , Adjustment 26

MS Circuit Board 27

M Circuit Board Wiring (1) 28

M Circuit Board Wiring (2) 29

M Circuit Board Wiring (3) 30

M Circuit Board Wiring (4) 31

M Circuit Board Wiring (5) 32

BA (Complementary Buffer Amplifier) Circuit Diagram 33

BA Circuit Board Wiring 34

KP (Key Voltage for Pedal) Circuit Diagram 35

KP Circuit Board, Adjustment, Wiring 36

TEK (Touch Control, Expression and Knee Lever) Circuit Diagram 37

TEK Circuit Board, Adjustment, Wiring 38

STR (Solo Key Transformation and Reverb) Circuit Diagram 39

STR Circuit Board, Adjustment, Wiring 40

SS (Solo Sub Oscillator) Circuit Diagram 41

SS Circuit Board, Adjustment,Wiring 42

MOS (Modulation and Sub Oscillator) Circuit Diagram 43

MOS Circuit Board, Adjustment, Wiring 44

INDEX

Page

PSM (Preset Tone Selection and Memory) Circuit Diagram 45
PSM Circuit Board, Wiring 46
RHY 1 (Rhythm) Circuit Diagram 47
RHY 1 Circuit Board, Adjustment, Wiring 48
RHY 2 (Rhythm) Circuit Diagram 49
RHY 2 Circuit Board, Wiring 50
RHY 3 (Rhythm) Circuit Diagram 51
RHY 3 Circuit Board, Wiring 52
RHY 4 (Rhythm) Circuit Diagram 53
RHY 4 Circuit Board, Adjustment, Wiring 54
RHY 5 (Rhythm) Circuit Diagram 55
RHY 5 Circuit Board, Adjustment, Wiring 56
KS (Key Voltage for Solo) Circuit Diagram 57
KS Circuit Board, Adjustment, Wiring 58
SM (Preset Tone Selection and Memory for Solo Keyboard) Circuit Diagram 59
SM Circuit Board, Wiring 60
PB (Preset for Overtone and Buffer) Circuit Diagram 61
PB Circuit Board, Adjustment, Wiring 62
OVT (Overtone) Circuit Diagram 63
OVT Circuit Board, Wiring 64
SR (Solo Touch Response) Circuit Diagram & Circuit Board 65
TU, OV, WM, R Circuit Diagram & Circuit Board 66
TS (Variable Tone Module) Circuit Diagram & Circuit Board, Factory Setting
Tone Module Circuit Diagram & Circuit Board 67
TV (Touch Vibrato) Circuit Diagram & Circuit Board,
BB (Buffer Amp. for Control Signal) Circuit Diagram & Circuit Board 68
TBU, TBL, TBP, TBS (Tone Board) Circuit Diagram 69
TBU, TBL, TBP, TBS Wiring 70
SH (Sample Hold) Circuit Diagram & Circuit Board 71
KAS (Key Assigner) Circuit Diagram 72
KAS (Key Assigner) Circuit Diagram, Operation Out Line 73
KAS Circuit Board, Adjustment 74
KAS Circuit Board Wiring 75

INDEX

Page

Keyboard Circuit Diagram (1) 76
Keyboard Circuit Diagram (2) 77
PN 1 (Panel 1) Circuit Diagram (1) 78
PN 1 (Panel 1) Circuit Diagram (2) 79
PN 1 (Panel 1) Circuit Diagram (3) 80
PN 2 (Panel 2) Circuit Diagram (1) 81
PN 2 (Panel 2) Circuit Diagram (2) 82
PN 2 (Panel 2) Circuit Diagram (3) 83
PN 3 (Panel 3) Circuit Diagram 84
PN 4 (Panel 4) Circuit Diagram 85
PN 5 (Panel 5) Circuit Diagram (1) 86
PN 5 (Panel 5) Circuit Diagram (2) 87
PN 6 (Panel 6) Circuit Diagram (1) 88
PN 6 (Panel 6) Circuit Diagram (2) 89
PN 6 (Panel 6) Circuit Diagram (3) 90
PN 6 (Panel 6) Circuit Diagram (4) 91
PN 7 (Panel 7) Circuit Diagram 92
PN 8 (Panel 8) Circuit Diagram (1) 93
PN 8 (Panel 8) Circuit Diagram (2) 94
PN 9 (Panel 9) Circuit Diagram 95
Knee (Knee Lever) and Exp. (Expression) Circuit Diagram 96
TC (Tone Cabinet Connector) Circuit Diagram 97
Power Supply Unit Circuit Diagram (1) 98
Power Supply Unit Circuit Diagram (2) 99
PU (Power Supply Unit) Circuit Board, Adjustment 100
Power Supply Unit Wiring (1) [General Spec.] 101
Power Supply Unit Wiring (2) [UL and CSA Spec.] 102
Power Supply Unit Wiring (3) [North European Spec.] 103
Power Supply Unit Wiring (4) [European and South African Spec.] 104
Power Supply Unit Wiring (5) [Australian Spec.] 105
Power Supply Unit Wiring (6) [Japanese Spec.] 106
MB 1 (Mother Board) Circuit Diagram . . . Located below the rack 107
MB 2 (Mother Board) Circuit Diagram . . . Located below the rack 108

INDEX

Page

Initial Clear Switch Circuit Diagram 109

GX-1 GENERAL INSPECTION and ADJUSTMENT PROCEDURES 110

GX-1 PARTS LIST 111

NOTE: ABBREVIATIONS OF WIRE COLOR IN ELECTONE

BL ..... BLACK	BR ..... BROWN	RE ..... RED	OR ..... ORANGE
YE ..... YELLOW	GR ..... GREEN	BE ..... BLUE	VI ..... VIOLET
GY ..... GRAY	WH ..... WHITE	GG ..... GRASS GREEN	SB ..... SKY BLUE
PK ..... PINK	TR ..... TRANSPARENT	TP ..... TIN PLATED WIRE	

GX-1 SPECIFICATIONS

Divisions	Upper Manual:	61 Keys	C ~ c_4
	Lower Manual:	61 Keys	C ~ c_4
	Pedals:	25 Keys	C_1 ~ c
	Solo Manual:	37 Keys	c_1 ~ c_4
	Portament Manual:		c_1 ~ c_4
Master Oscillator	Upper Manual:	2 successions with 8 notes	
	Lower Manual:	—do.—	
	Pedals:	2 successions with one note (In this case, two oscillators are used for the second succession.)	
	Solo Manual:	One succession with one note (Common-Portamento Key)	
Tone Selectors	Upper Manual:	10	
	Lower Manual:	10	
	Pedal:	10	
	Solo Manual:	10	
Preset Tone Module Numbers			
	Upper Manual:	20 (Each module freely adjustable for any tone.)	
	Lower Manual:	20 (—do.—)	
	Pedal:	20 (—do.—)	
	Solo Manual:	10 (—do.—)	
Control Levers and Lever Switches			
	Pitch Bend:	Upper Lower Pedal	
	Coupler:	L to U U to L L to P S to U	
	Sustain:	Upper Lower Pedal	

Over Tone:	Upper I –	1, 2, 4, 5, 6, 8.
	II –	1, 2, 3, 4, 7, 8.
	Lower I –	1, 2, 4, 5, 6, 8.
	II –	1, 2, 3, 4, 7, 8.
	Pedal I –	1/2, 1, 2, 5/2, 3, 4.
	II –	1/2, 1, 3/2, 2, 7/2, 4.
	Solo –	1/8, 1/2, 1, 2, 4, 8.
Volume:	Upper	
	Lower	
	Pedal	
Brilliance:	Upper	
	Lower	
	Pedal	
Resonance:	Upper	
	Lower	
	Pedal	
Mixing:	Upper	
	Lower	
	Pedal	
Reverb:	Upper and Lower	
	Solo	
Total Volume		
Manual Balance		

Solo section

Solo Control Levers and Levers Switches

Sample/Hold:	Rhythm Pattern Selector Switch
	(SD, CB, MA, HH, CY1, CY2, BD, LC, HC, BO)
	VCF
	VCO
	Sample/Hold Switch
	Sample Indicator Lamp
Ring Modulator:	Oscillator Level
	Oscillator Speed
	Solo Keyboard
	Noise Level
	Noise Color
	Normal and Modurated Signal Mixing Lever
Envelope:	Attack Time
	Sustain
Pitch Envelope:	Initial Pitch
	First Decay
	Second Decay
	Final Pitch
Sub Oscillator:	Function
	Speed
	VCA
	VCF
	VCO
Solo Portament	
Knee Lever Control:	Solo Keyboard Portament Switch

Solo Touch Response:
- First Touch
  - Attack Time
  - Initial Pitch
- Second Touch
  - Pitch
  - Brilliance
  - Volume
  - Sub Oscillator
    - Speed
    - VCO
    - VCF
    - VCA
- Third Touch
  - Vibrato
  - Wah Wah
  - Resonance

Upper Sub Controler

Upper Touch Responce:
- Third Touch
  - Vibrato
  - Wah Wah
  - Resonance

Random Signal: (noise)
- VCF
- VCO
- Color

Sub Oscillator:
- Function
- Speed
- VCA
- VCF
- VCO
- Solo Keyboard Switch

Knee Control Switch:
- Upper Portament
- Upper Sustain
- Sub Oscillator
  - VCO
  - VCF
  - VCA
  - Speed

Upper Portament

Lower Sub Controler

Sub Oscillator: Solo Keyboard
Function
Speed
VCA
VCF
VCO

Knee Control Switch: Lower Sustain
Sub Oscillator VCO
VCF
VCA
Speed

Foot Switch Control Selector

Upper Sub Oscillator Cancel
Lower Sub Oscillator Cancel
Rhythm Stop
Solo Portament
Upper Portament

Others

Tuning: Upper
Lower
Pedal
Solo

Wave Motion: Upper
Lower
Pedal II
Pedal II'

Over Tone Preset Button: 1, 2, 3, 4, C

Over Tone Preset Selector Switch:	1	Upper	I
			II
		Lower	I
			II
		Pedal	I
			II
	2	Upper	I
			II
		Lower	I
			II
		Pedal	I
			II
	3	Upper	I
			II
		Lower	I
			II
		Pedal	I
			II

Expression Dynamic Compressor:
Upper
Lower
Pedal
Solo
Rhythm

Expression Pedal
Expression Switch
Knee Lever

Auto Rhythm 14 Rhythm 3 Variations

Rhythm Selector: March I, March II, Swing, Waltz, Slow Rock, Jazz Rock I, Jazz Rock II, Tango, Beguine, Rumba, Mambo, Bossa Nova, Samba I, Samba II.

Variation: A, B.

Imarge Controler
Tempo
Swinger
Volume
Balance

Start
Synchro Start
Tempo Lamp

Power Consumption

420W	100V	125V
	110V	220V
	117V	240V

Dimensions

GX-1	Width:	1,600 mm
	Height:	1,135 mm
	Depth:	800 mm
	Weight:	300 kg
Bench:	Width:	1,455 mm
	Height:	666 mm
	Depth:	660 mm
	Weight:	60 kg

Pedal Keyboard: Weight 27 kg

GX-1 CIRCUIT DIAGRAM & CIRCUIT BOARD

Contents of Circuit Board

Circuit Board	Contents	Location
MU, ML MP, MS	* Voltage Controled Oscillator (VCOIII) * Pitch Control Circuit for Voltage Controled Oscillator * Wave Shaping Converter (W S C Module) * Wave Shaping Converter and Doubler (by discrete system) * Band Pass Filter (Fixed) * High Pass Filter (Fixed) * Sound Source Signal (Wave form) Selector Gate Switching Circuit by FET Gate * Sound Source Signal (Wave form) Selector Voltage Control Amplifier (Signal level can be chosen continuously.) * Preamplifier * High Pass Filter (Voltage Controled Filter) * Low Pass Filter (Voltage Controled Filter) * Voltage Controled Amplifier (Controled by Envelope Generator) * Voltage Controled Amplifier for Level Setting * Envelope Generator for Voltage Controled Filter * Envelope Generator for Voltage Controled Amplifier	on the Rack

Contents of Circuit Board

Circuit Board	Contents	Location
K A S (KAU KAL)	* Key Corder * Key Assigner * Clock Oscillator * Octave Ladder Gate * Note Ladder Gate * 8 Channel Division Gate * 8 Channel Timing circuit * Voltage Follower circuit * UK Portament circuit * Out-Put Voltage Buffer circuit * Initial Clear circuit * IC Power Supply circuit	on the Keybed
K P	* Ladder Network for Key Voltage * Gate Circuit for Gate Circuit * Buffer Amplifier for Key Voltage * Gate Keying Circuit for MP Circuit Control * Key Voltage Follower Circuit	on the Rack
T E K	* First Touch Detector * Second Touch Detector * Voltage Controled Amplifier for Solo Signal which controled by Second Touch Detected Signal. * Voltage Controled Amplifier for Solo Sub Oscillator Control which controled by Second Touch Detected Signal * Third Touch Detector * Knee Lever Detector * Voltage Controled Amplifier for UK Sub Oscillator which controled by Knee Lever Detected Signal * Voltage Controled Amplifier for LK Sub Oscillator	on the Rack

Contents of Circuit Board

Circuit Board	Contents	Location
T E K	which controled by Knee Lever Detected Signal * Expression Detector * Expression Circuit * Dynamic Range Control Circuit * Tone Cabinet Selector and Total Volume Control Circuit * The Amplifier for Output	on the Rack
S T R	* UK Signal Preamplifier (2 Amplifiers) * LK —do.— * SK —do.— * PK —do.— (one amplifier) * UK and LK Reverb Signal Pick Up Amplifier * SK Reverb Signal Driving Amplifier * SK Reverb Signal Pick Up Amplifier * SK Key Voltage Converter (Lenear Voltage to Logarithm Voltage)	on the Rack
S S	* Random Noise Generator (for Ring Modulator) * Portamento Precedence Circuit (Portamento Keyboard Precede to Solo Keyboard) * Portamento Key Voltage Delay Circuit * Solo Sub Oscillator (VCOI) * Waveform Converter for Solo Sub Oscillator * Oscillator (VCOI) for Ring Modulator * Ring Modulator	on the Rack

Contents of Circuit Board

Circuit Board	Contents	Location
P S M	* One Preset Tone Selector Button Selection and Precedence Circuit (2 channels, 2 circuits) * 10.6V DC Supply Control Circuit . . . . . 20 * Lamp in the Preset Tone Selector Button Driving Circuit 10	on the Rack
M O S	* UK and LK Reverb Signal Driving Amplifier * Oscillator for Pulse Width Modulation * Pulse Width Modulation Gate * Sub Oscillator for UK * Waveform Converter for UK Sub Oscillator * LK Sub Oscillator * Waveform Converter for LK Sub Oscillator * Random Noise Generator (for UK)	on the Rack
RHY 1	* Tempo Clock Oscillator on Auto Rhythm * Comparator for Swinger (7 circuits) * Basic Voltage Circuit for Swinger * Counter for Clock Pulse * Counter for Waltz and 5 measure * Up Beat Producing Circuit * Down and Up Beat Control Circuit * Rhythm Stop with Foot Switch Operation Circuit	on the Rack

Contents of Circuit Board

Circuit Board	Contents	Location
RHY 1	* Synchro Start Operation Circuit * Rhythm Lamp Driving Circuit * Timing Selection Circuit for Lamp Driving Pulse	on the Rack
RHY 2	* Up Beat Matrix Circuit * Rhythm Variation Selector Circuit	on the Rack
RHY 3	* Down Beat Matrix Circuit * Rhythm Variation Selector Circuit	on the Rack
RHY 4	* Rhythm Sound Source Circuit, Oscillator System Bass Drum (Long), Bass Drum (Short), Conga (Low), Conga (High), Bongo (High), Claves, Cowbell, Rim Shot * Four Pre-amplifiers for Auto Rhythm	on the Rack
RHY 5	* White Noise Generator for Rhythm Sound Source and UK, LK, PK and SK Sound Source * Oscillation Noise Generator for Rhythm Sound Source * White Noise Signal Gate for Sound Source in M Circuit * Rhythm Sound Source, Noise System Cymbal 1, Cymbal 2, High Hat, Snare Drum	on the Rack

Contents of Circuit Board

Circuit Board	Contents	Location
K S	* Key Voltage Ladder Network * Key Voltage Gate Circuit * Key Voltage Buffer Circuit * Tuning Control Circuit for Portamento Keyboard	on the Panel 2
S M	* One Preset Tone Selector Button Selection and Memory Circuit (One channel 10 pcs.) * 10.6V DC Supply Control Circuit * Lamp in the Preset Tone Button Driving Circuit	on the Keybed
P B	* UK Sub Oscillator Signal Buffer Amplifier for VCO in M Circuit Board * UK Sub Oscillator Signal Buffer Amplifier for VCF in M Circuit Board * UK Sub Oscillator Signal Buffer Amplifier for VCA in M Circuit Board * LK Sub Oscillator Signal Buffer Amplifier for VCO in M Circuit Board * LK Sub Oscillator Signal Buffer Amplifier for VCF in M Circuit Board * LK Sub Oscillator Signal Buffer Amplifier for VCA in M Circuit Board * UK Sub Oscillator Cancel Circuit with Foot Switch * LK Sub Oscillator Cancel Circuit with Foot Switch * Buffer Amplifier for Panel Effect Levers (15 circuits) * Single Preset Tone Button Selection and Memory Circuit for Overtone	on the Keybed

Contents of Circuit Board

Circuit Board	Contents	Location
O V T	* Overtone No. 2 Fixing Circuit (If any Overtone Switch Lever on Panel 1 or Panel 8 is set at a position other than a Click Stop, it has the same effect as being set at Stop "2") UI, UII, LI, LII, PI, PII, S	on the Keybed
S R	* Resistors Circuit for Control the Solo Touch Response Level	on the Panel 3
T U	* Compensatory Resistor for the Variation Characteristic of the Tuning Volume	on the Panel 8
R	* Setting Resistor for the Variation Limit of the Brilliance Volume	on the Panel 1
O V	* OR Circuit for the Overtone Switch and Overtone Preset Switch	on the Panel 1 and 8
T V	* UK Touch Response Detector Circuit * Detector Circuit for the Position where the Portamento Set.	on the Panel 5
S H	* Sample Hold Circuit * Solo Sample Hold Driving Circuit for Switching * Sample Hold Lamp Driving Circuit * Solo VCO Modulated Signal Preamplifier * OR Circuit for Sample Hold Trigger	on the Panel 2

Contents of Circuit Board

Circuit Board	Contents	Location
B B	* Buffer Amplifier for Control Signal for the Waveform of the Sound Source Selection Gate (VCA) in M Circuit	on the Keybed
K N	* Compensatory Circuit for Variation Characteristic of the Cds in the Knee Lever Circuit * Sub Oscillator Control Signal Detector Circuit	on the Knee Lever Unit
W M	* Setting Resistor for the Variation Limit of the Wave Motion.	on the Panel 8
MB 1	* Wiring Circuit among the Connectors for the PSM, Rhythm, Preamplifiers and other Circuit Board	
MB 2	* Wiring Circuit among the Connectors for the MUI1 to MUII8 Circuit Board and MLI1 to MLII8 Circuit Board	

Unit Layout (1)

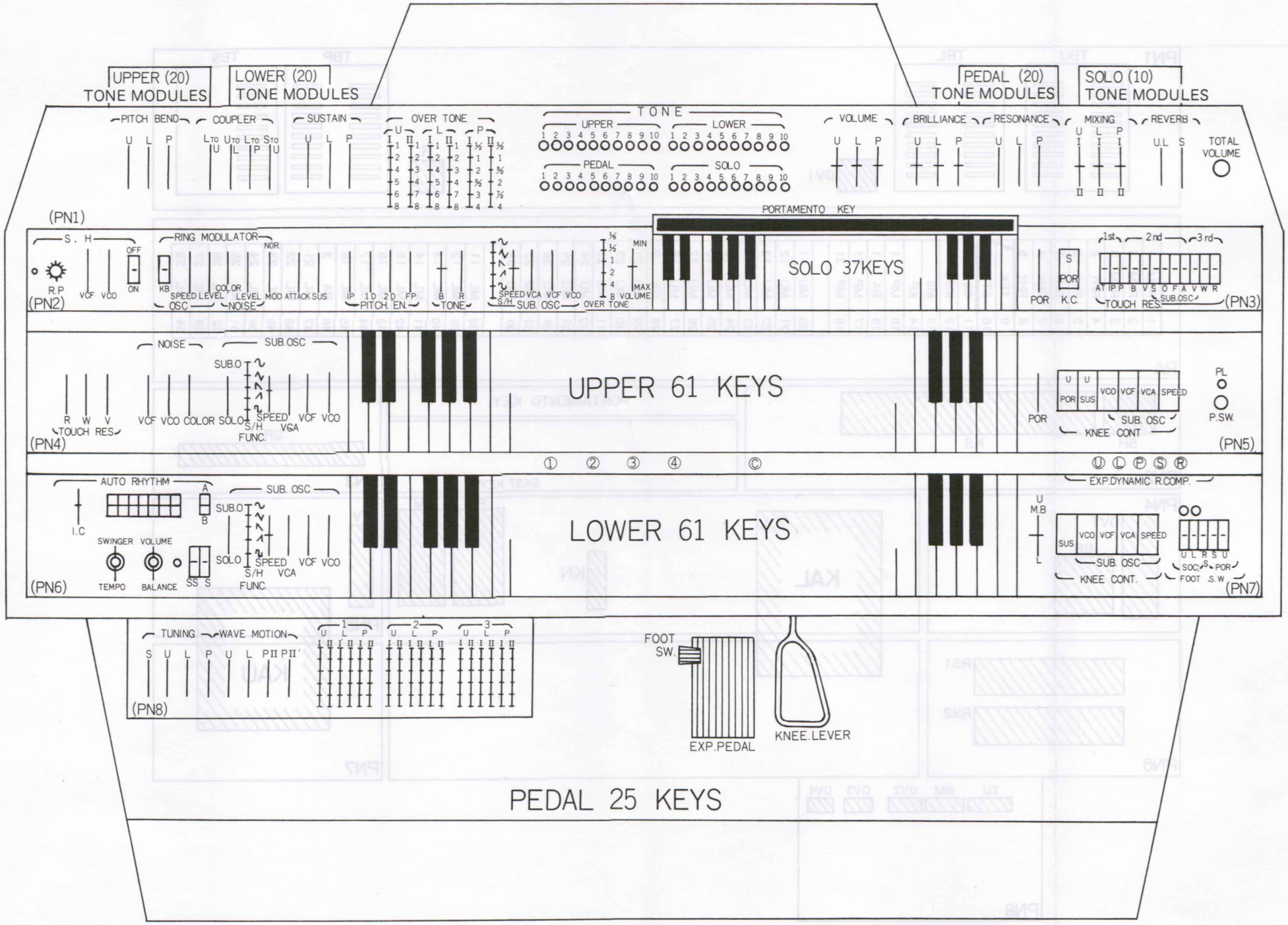

KEC-3388-46

Unit Layout (2)

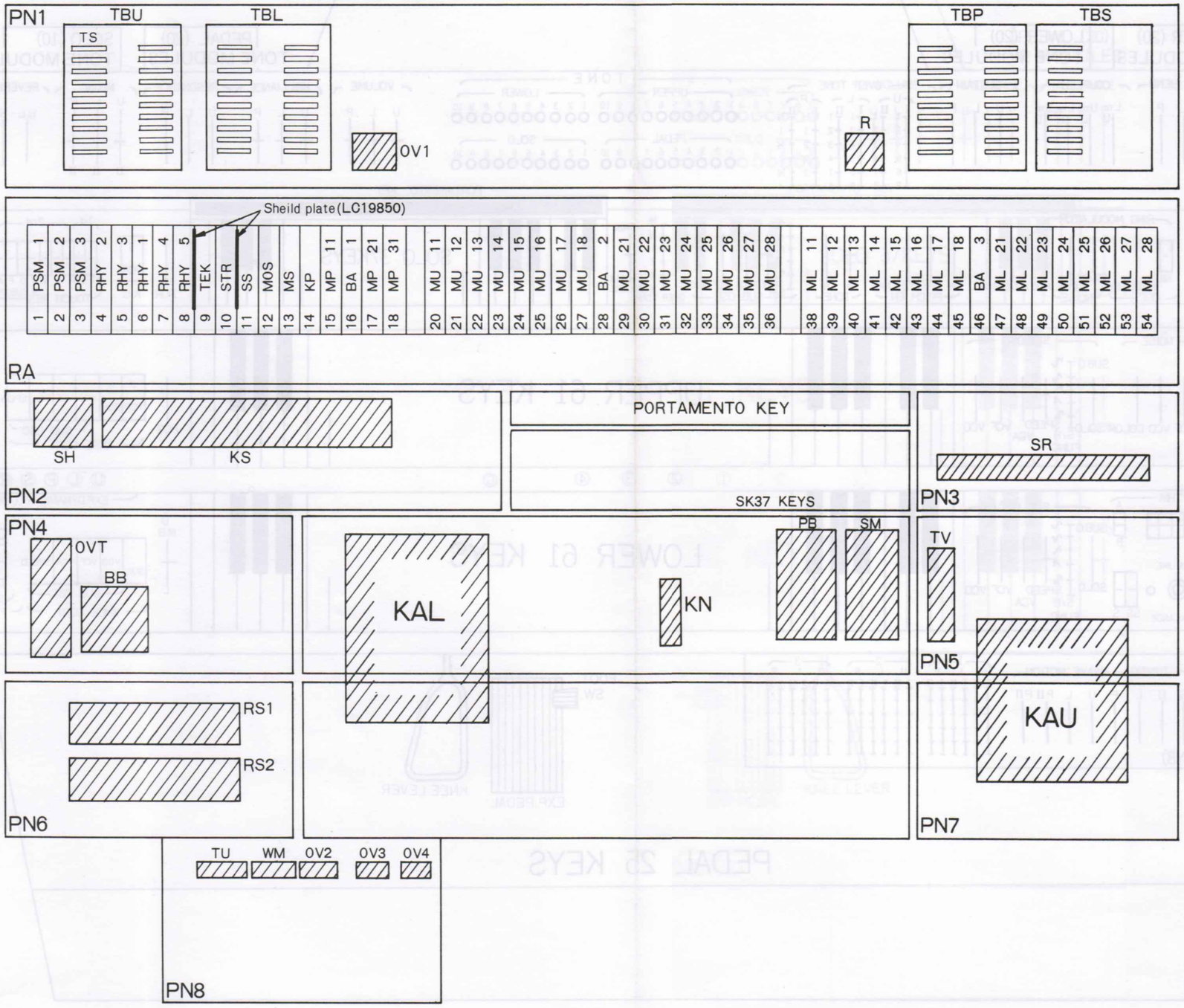

Block Diagram (Upper Section)

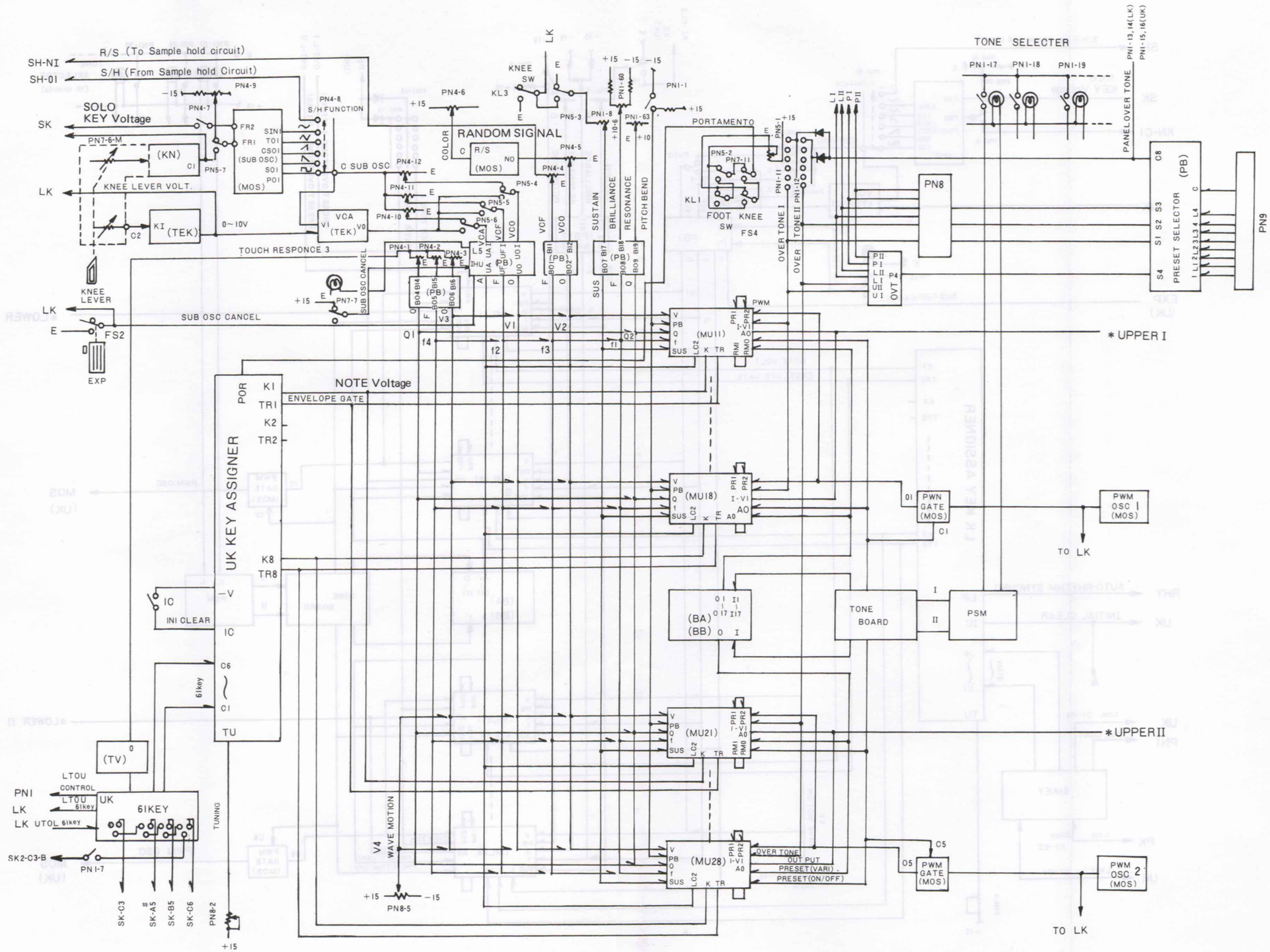

Block Diagram (Lower Section)

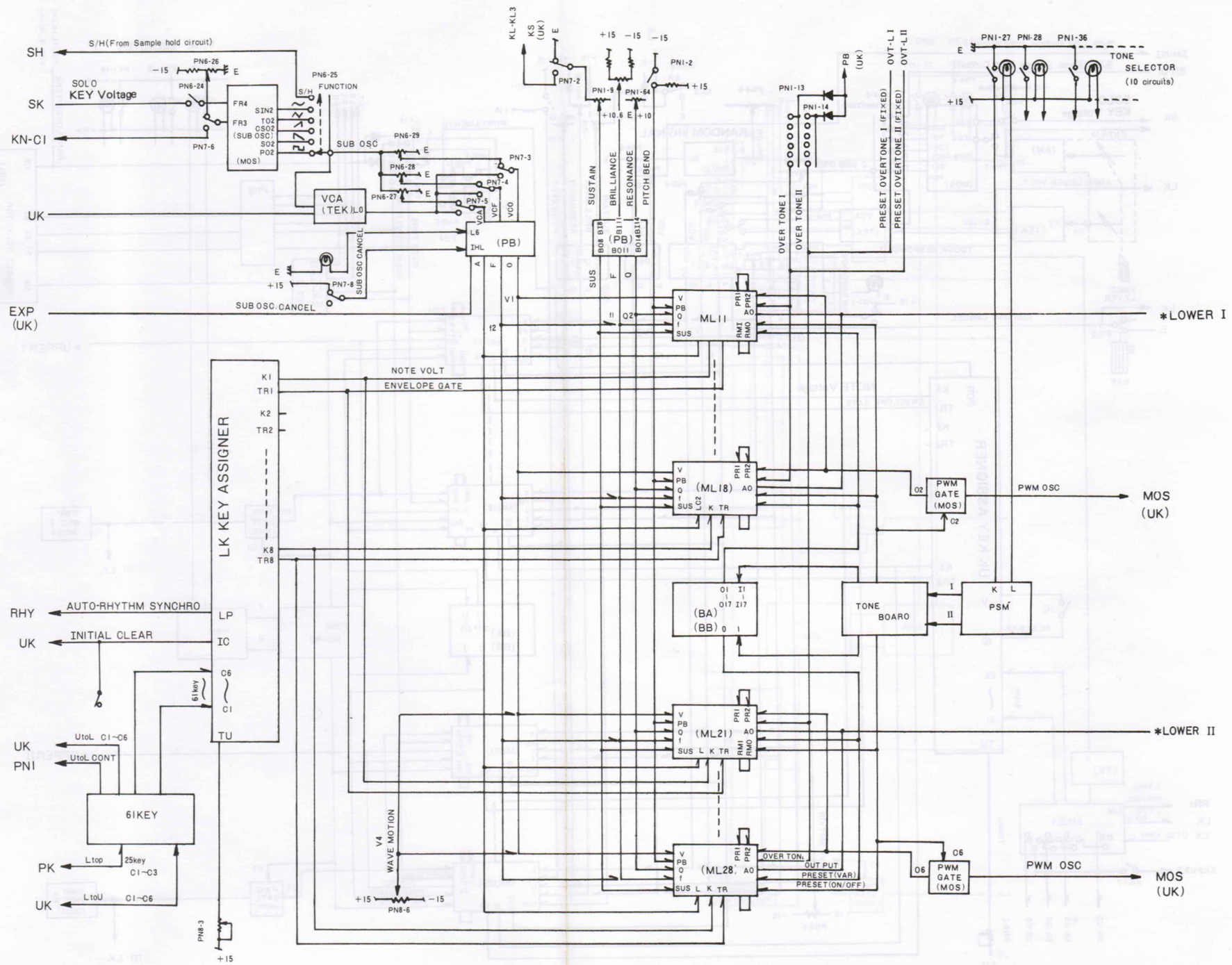

Block Diagram (Pedal Section)

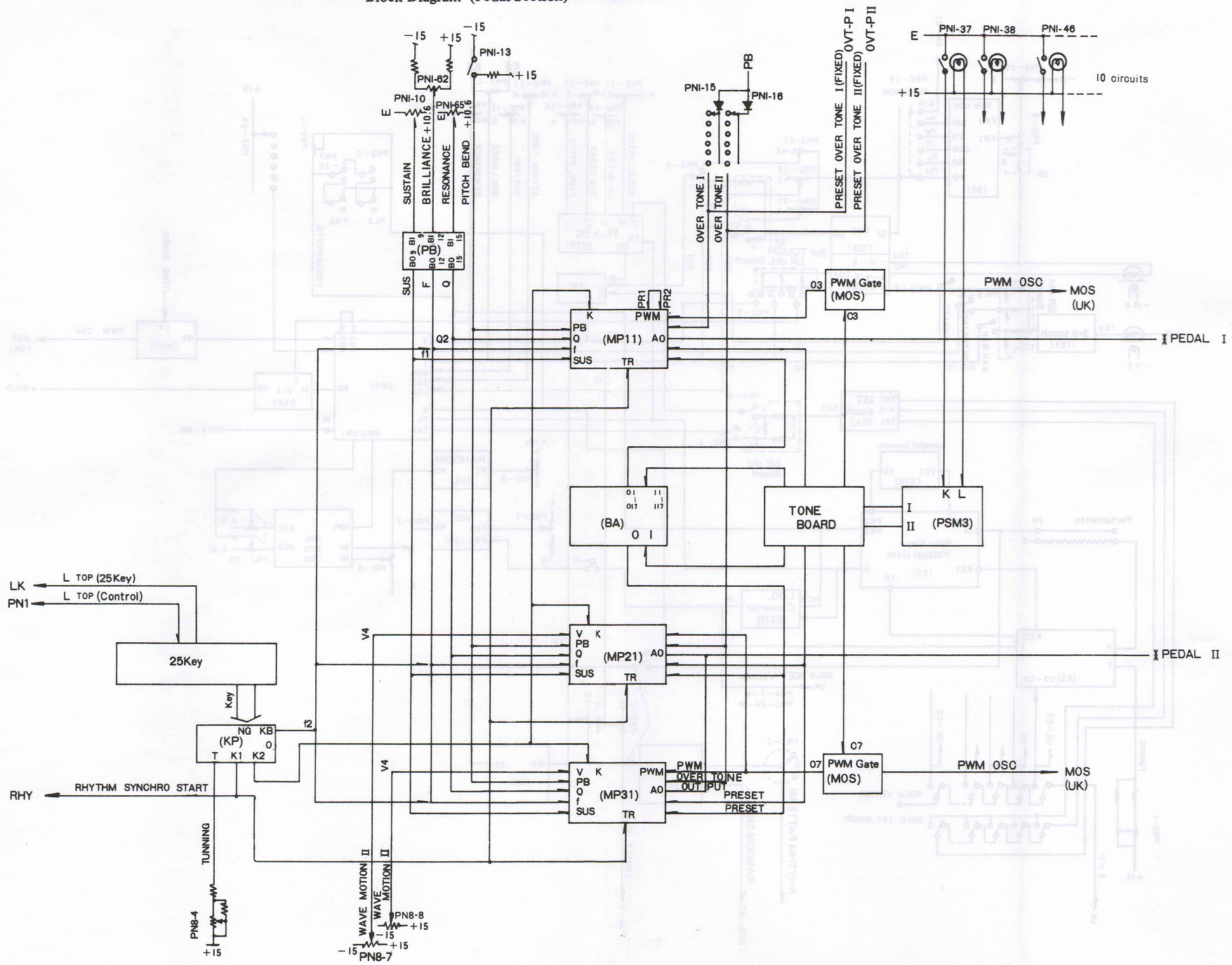

KEC-3386-46

Block Diagram (Solo Section)

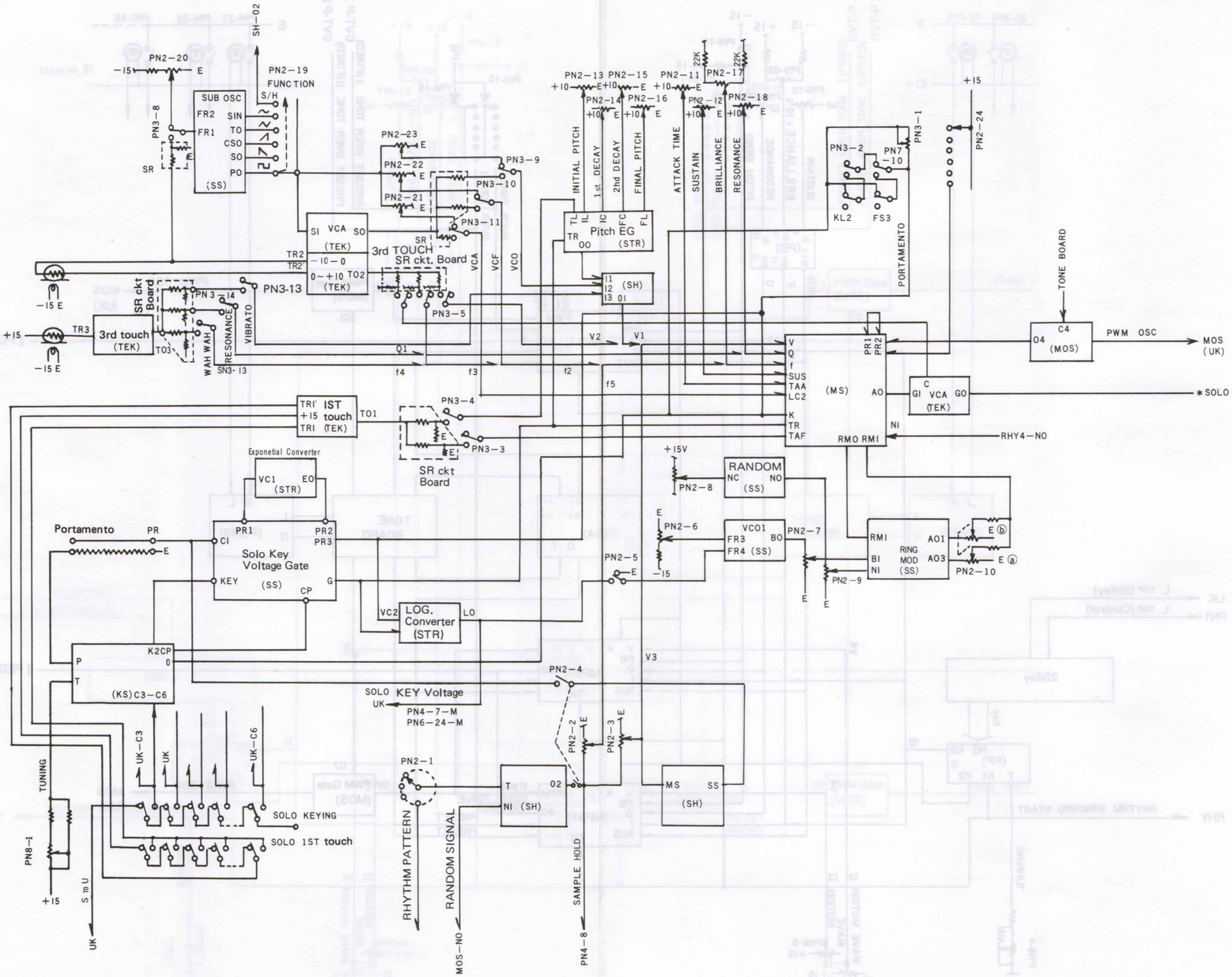

Block Diagram (Rhythm Section)

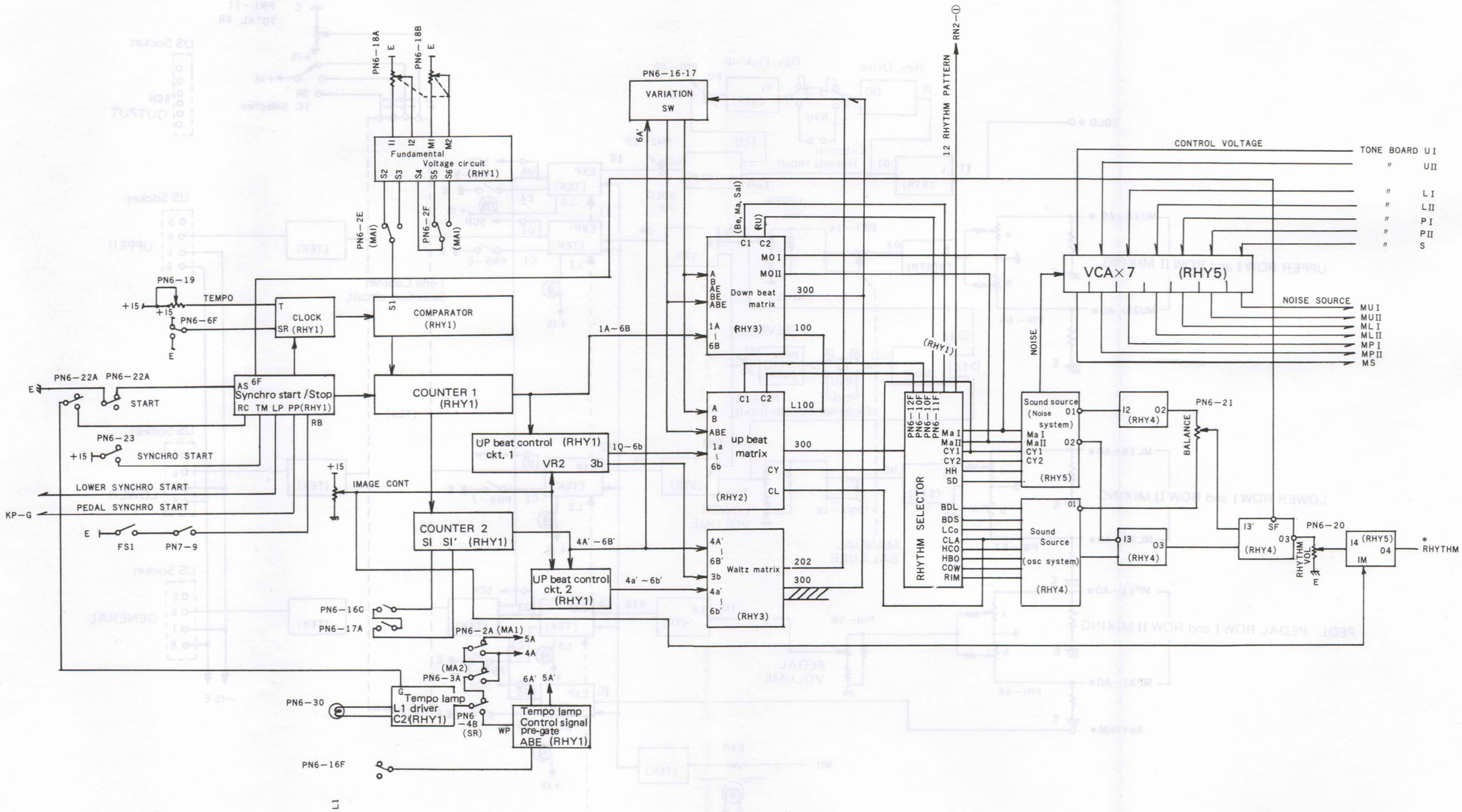

Block Diagram (Preamp)

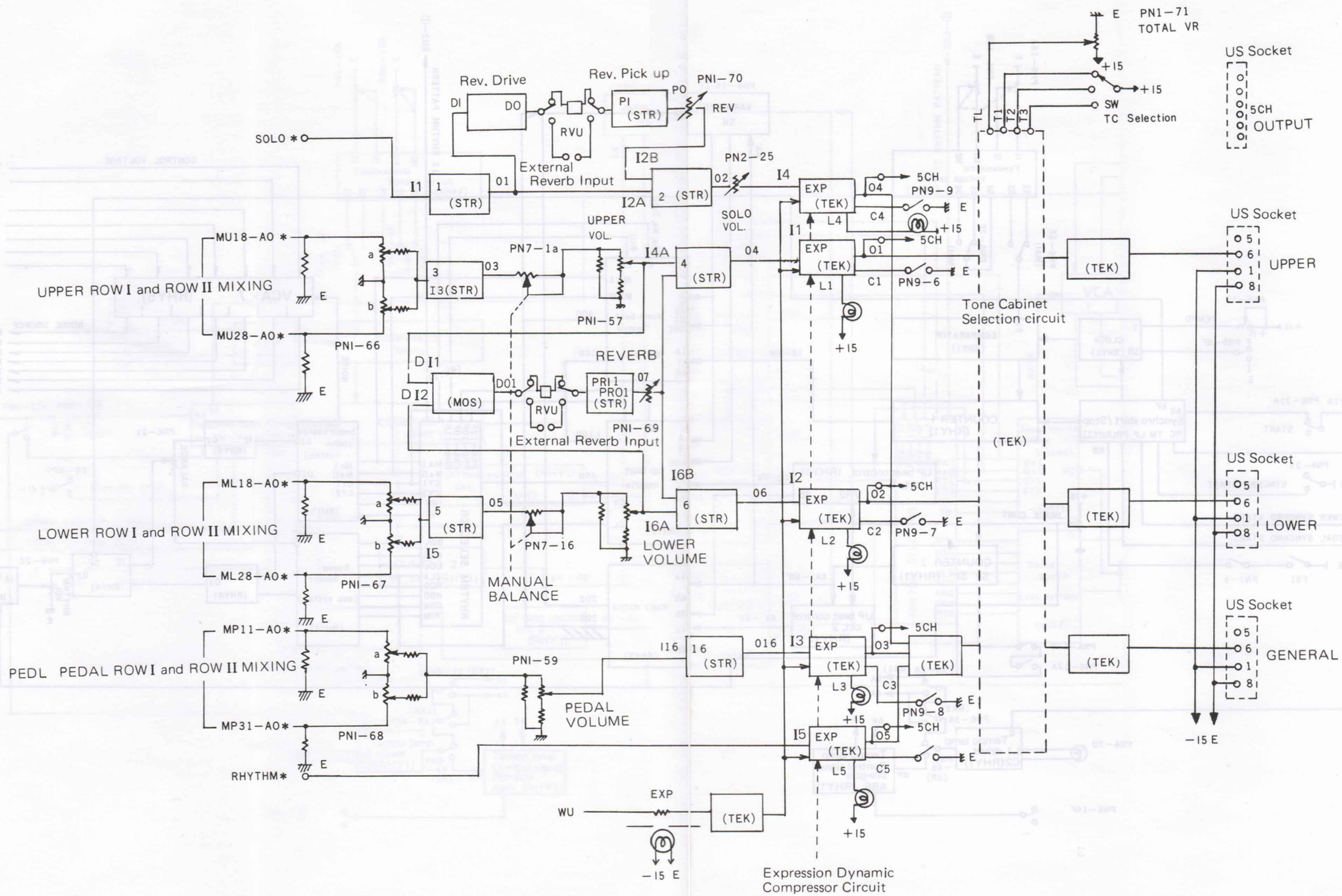

Terminal Function Table(Mcircuit)

	U I	U II	L I	L II	P I	P II	S
V_1	Sub OSC	Sub OSC	Sub OSC	Sub OSC	E	E	Sub OSC Pitch Envelope Touch Response 3
V_2	Noise Modulation	Noise Modulation	E	E	E	E	Second Pitch
V_3	Touch Response 3 (VIBRATO)	Touch Response 3 (VIBRATO)	E	E	E	E	Sample Hold
V_4	E	Wave Motion	E	Wave Motion	E	Wave Motion	E
V_5	X	X	X	X	X	X	X
f_1	Brilliance	Brilliance	Brilliance	Brilliance	Brilliance	Brilliance	Brilliance
f_2	Sub OSC	Sub OSC	Sub OSC	Sub OSC	Key Voltage follower	Key Voltage follower	Sub OSC
f_3	Noise Modulation	Noise Modulation	E	E	E	E	2nd Brilliance
f_4	Touch Response 3 (WAH-WAH)	Touch Response 3 (WAH-WAH)	E	E	E	E	Touch Response 3
f_5	E	E	E	E	E	E	Sample Hold
f_6	Preset (H)	Preset (H)	Preset (H)	Preset (H)	Preset (H)	Preset (H)	Preset (H)
f_7	X	X	X	X	X	X	X
f_8	Preset (L)	Preset (L)	Preset (L)	Preset (L)	Preset (L)	Preset (L)	Preset (L)
f_9	X	X	X	X	X	X	X
Q_1	Touch Response 3 (RESONANCE)	Touch Response 3	E	E	E	E	Touch Response
Q_2	Resonance	Resonance	Resonance	Resonance	Resonance	Resonance	Resonance
Q_3	Preset (H)	Preset (H)	Preset (H)	Preset (H)	Preset (H)	Preset (H)	Preset (H)
Q_4	Preset (L)	Preset (L)	Preset (L)	Preset (L)	Preset (L)	Preset (L)	Preset (L)
LC1	Preset	Preset	Preset	Preset	Preset	Preset	Preset
LC2	Sub OSC	Sub OSC	Sub OSC	Sub OSC	X	X	Sub OSC

M (Master Generator) Circuit Diagram

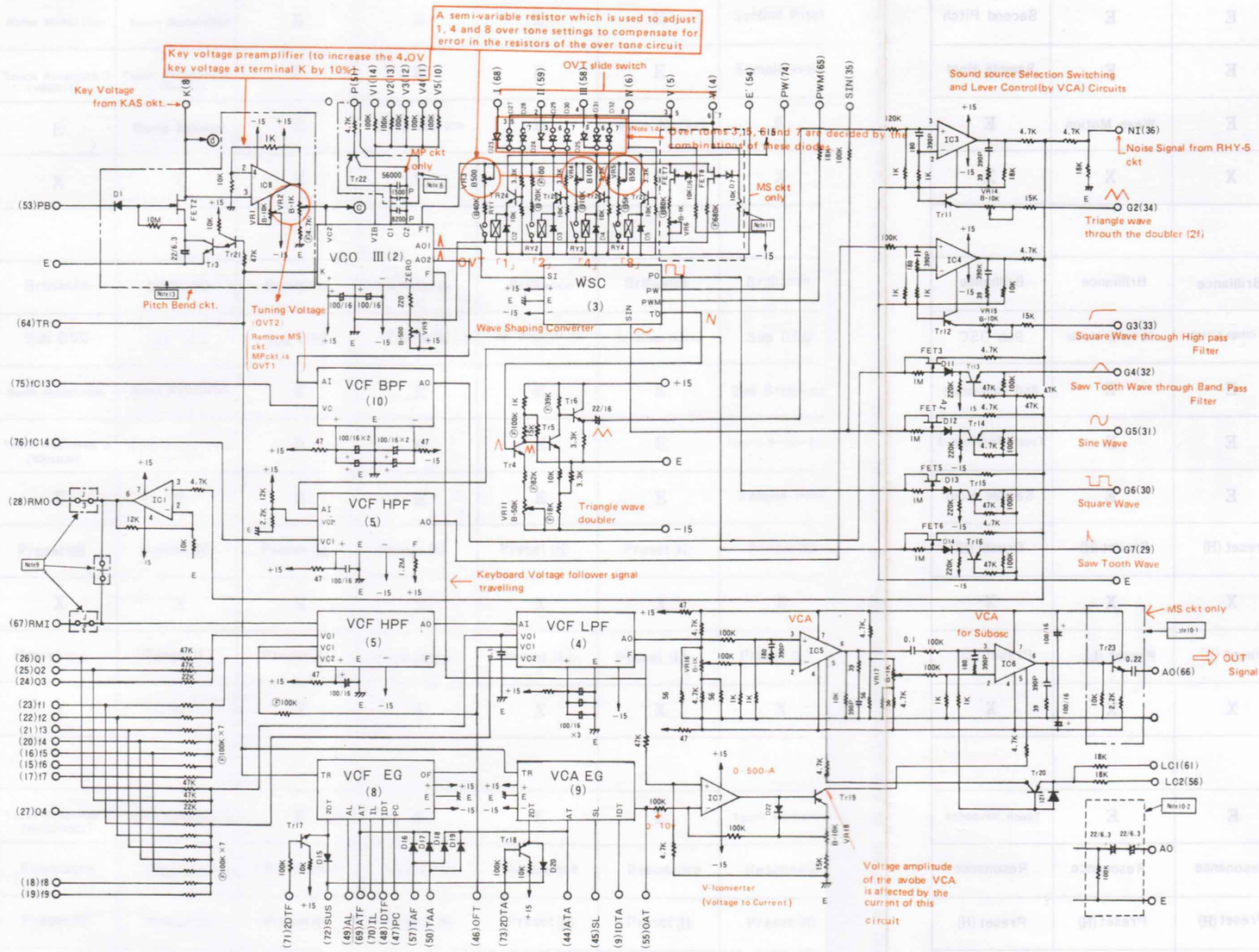

+15	(39) (40) (79) (80)
−15	(37) (38) (77) (78)
E	(1) (2) (3) (41) (42) (43)

Diode Conbination

	for Row I	for Row II	for Solo
D 27	○	○	×
D 28	×	○	×
D 29	×	○	×
D 30	○	○	×
D 31	○	×	×
D 32	○	○	×

Note 14)
I : MU1, ML1, MP1
II : MU2, ML2, MP2
S : MS
Diode D_{27} ～ D_{32} are in accordance with the above table.

Notes)

1. Transistor
   Tr3 @ 6 17 18, 21,23 ～27 : 2SC458 (C)
   Tr11 ～16 19, 20,22 : 2SA561 (Y)
2. FET
   FET2 ～8 : 2SK30A (Y)
3. IC
   IC1, 7, 8, : TA7504M
   IC3 ～6 : CA3080
4. Diode : 1S2473VE
5. Volume
   VR2 : 3006P
   VR1, 3～6,9,11, 14～18 : 3321H
6. Resistor
   Ⓑ marked: metal film resistor 0.1%
   Ⓕ marked: " MR-25 ± 2%
7. Reley RY1 ～6 : TRA-102
8. Note 8 : for MP only
9. MS : J2 and J3 are closed, J1 is opened.
   MU, ML, MP : J1 is closed.
10. Note 10-1 : for MS only
    10 - 2 : for MU, ML, MP ckt.
11. Note 11 : for MS only
12. —⊟— : Tantalum Capacitor
13. Note 13 : This circuit is not used for MS circuit Board, Therfore, and should be connected.

M Circuit Board, Adjustment

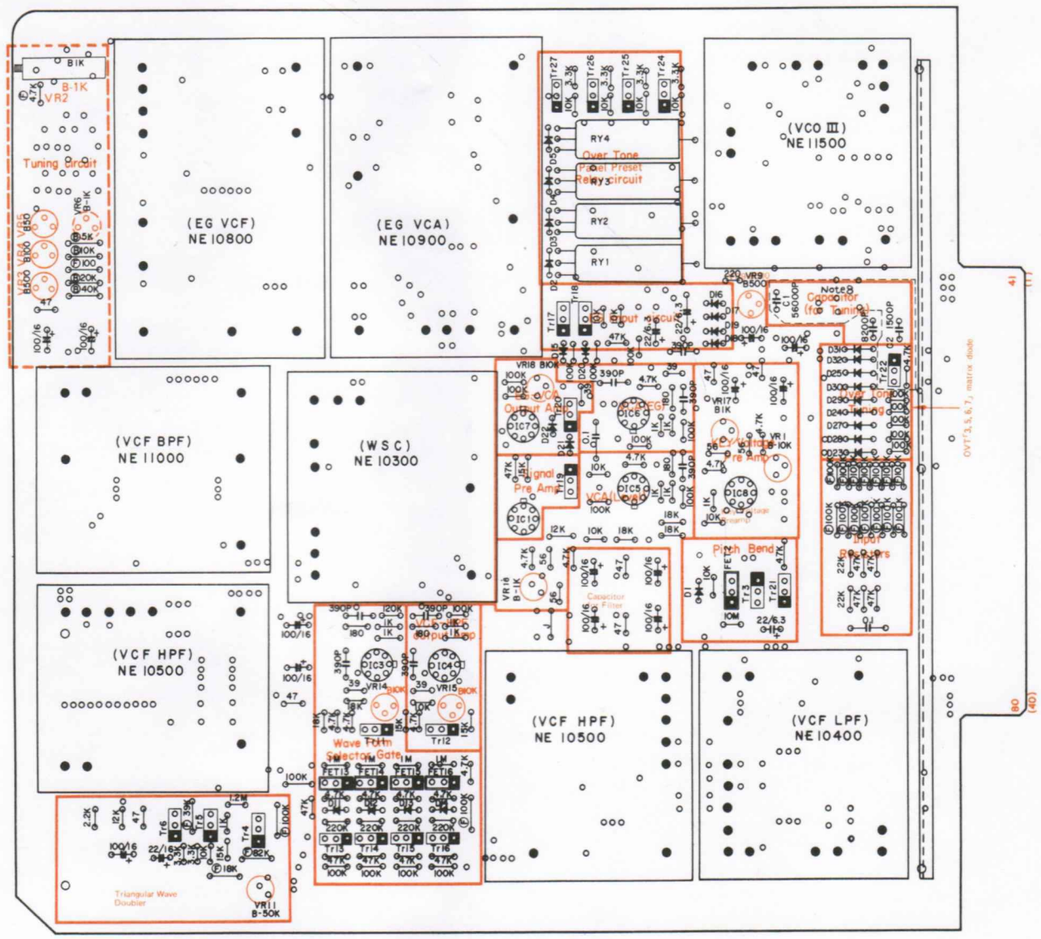

1. **Tuning**

   Note: Be sure to tune at VR2.
   Over tones 1, 4 and 8 should be adjusted at each auxiliary VR2 only after over tone 2 is tuned.

M ckt. \ Over tone	1/2	1	2	4	8
U.L	–	VR3	VR2	VR4	VR5
P	VR3	VR2	VR4	VR5	–
S	VR6	VR3	–	VR4	VR5

   MS circuit Board over tone 2 must be tuned within the KS circuit board.

2. **Key voltage preamp (OP8) and VCO III zero balance adjustment.**

   Conditions: Short circuit K terminal to E, the set for highest pitch (i.e., turn VR2 all the way to the left).

   • Key voltage preamp (OP8) adjustment -- VR1
   Adjust VR1 for VCO III output voltage at terminal VC2 of ±0.1mV.
   • VCO III zero balance adjustment -- VR9
   Adjust VR9 for VCO III output voltage at terminal FT of ±0.1mV.

3. **VCA zero adjustment (first stage) --VR16**

   The M circuit board to be adjusted should be producing a sound; at this time turn the sub oscillator VCA lever fully. When the function control is set to ⊓⊔ lock down just before the point at which a click sound is heard.

4. **VCA zero adjustment (final stage) -- VR17**

   Put only the M circuit board to be adjusted into the connector. Gradually increase the output level with VR17 while continually turning the key on and off. Lock down just before the point at which a click sound is heard.

5. **VCA-EG level adjustment -- VR18**

   Adjust VR18 for the same level as the volume on other M circuit boards.

6. **VCF-HPF level adjustment -- VR15**

   Adjust VR15 for the same sound as other M circuit boards.

7. **2 T wave adjustment -- VR11, VR14**

   Conditions: Tone module 19 should be turned up all the way.
   * Waveform adjustment -- VR11 *Level adjustment --VR14
   Adjust VR11 and 14 so that waveform appears at the RMO terminal (28).

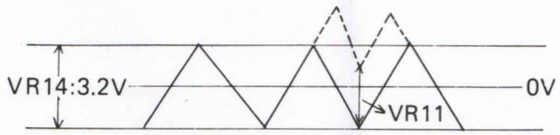

MS Cicuit Board

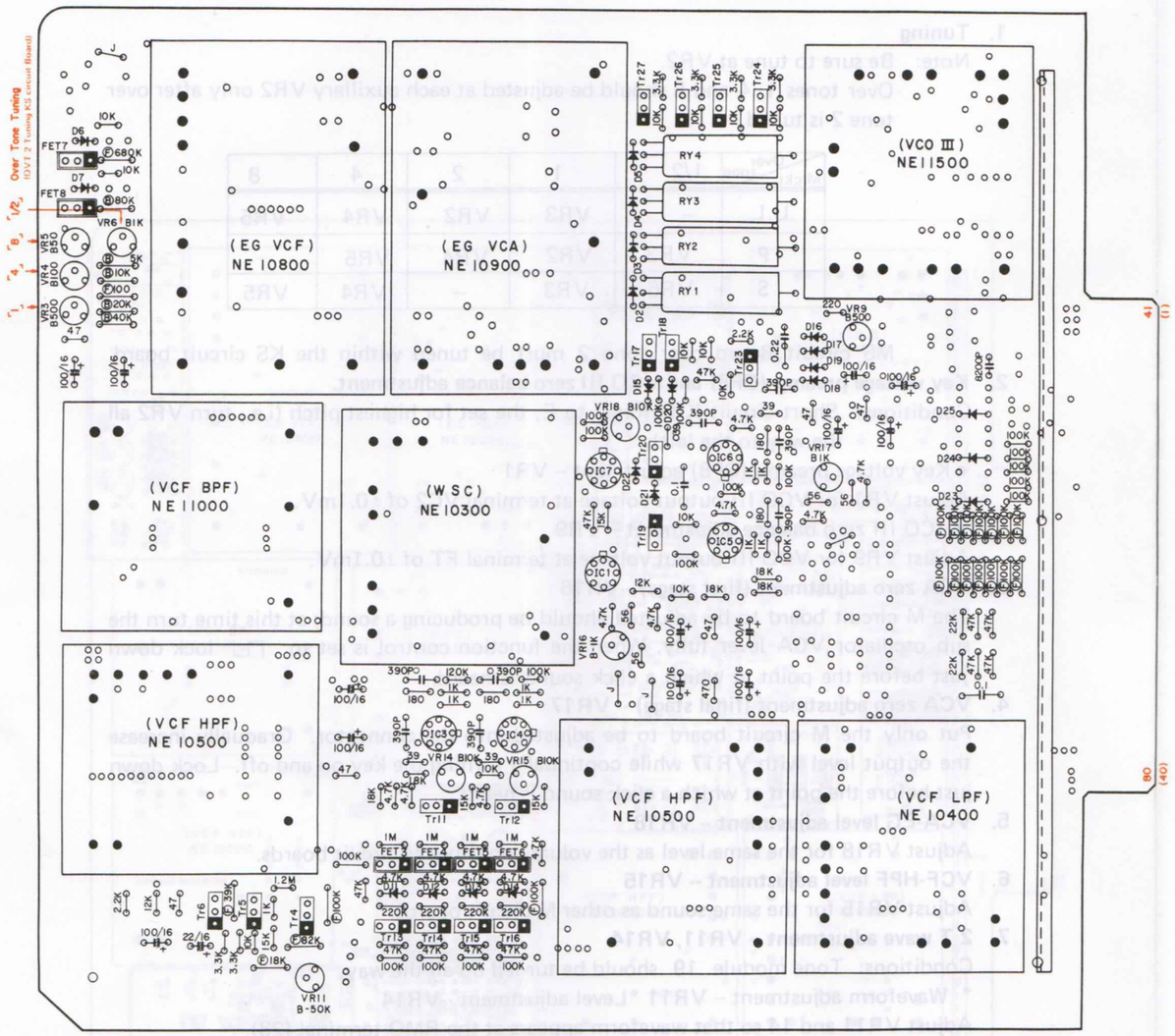

M Circuit Board Wiring (1)

M U 11

No.	Terminal	Color of wire	Direction	No.	Terminal	Color of wire	Direction
40	+15			80	78-15		
39	+15			79	+15		
38	−15			78	−15		
37	−15			77	−15		
36	N I	SBR	RHY5-01(16)	76	f c 14		
35	G 1			75	f c 13		
34	G 2	RE	BB-02	74	PW		
33	G 3	OR	BB-03	73	2DTF		
32	G 4	WH	TBU-21(65)	72	SUS		
31	G 5	GG	TBU-22(25)	71	2DTF		
30	G 6	SB	TBU-23(64)	70	I L		
29	G 7	PK	TBU-24(24)	69	ATF		
28	RMO			68	I		
27	Q 4			67	RMI		
26	Q 1	GG	PB-BO4	66	A O		
25	Q 2	GR	PB-BO13	65	PWM		
24	Q 3			64	T R		
23	f 1	BE	PB-BO10	63			
22	f 2	YE	PB-UF	62	L C 3		
21	f 3	GY	PB-BO1	61	L C 1		
20	f 4	PK	PB-BO5	60		BR	PN5-①-4
19	f 9			59	II		
18	f 8			58	III		
17	f 7			57	TAF		
16	f 5	BL12	MU11-V4(11)	56	L C 2		
15	f 6			55	OAT		
14	V 1	RE	PB-UO	54	E 1		
13	V 2	BR	PB-BO2	53	P B		
12	V 3	SB	PB-BO6	52	P R 1		
11	V 4	BL12×2	MU11-I5(6) MU11-E(3)	51	P R 2		
10	V 5			50	TAA		
9	1DTA			49	A L		
8	K			48	1DTF		
7	K B			47	P C	BR	TBU-25(63)
6	IV	YE	OVT-UI-4	46	OFT		
5	V	GR	OVT-UI-5	45	S L		
4	VI	BE	OVT-UI-6	44	ATA		
3	E	BL12	MU11-V4(11)	43	E		
2	E			42	E		
1	E			41	E		

MU12 MU13 MU14 MU15 MU16 MU17

Same name terminals on there circuit board are connected at the Mother board in common.

M U 18

No.	Terminal	Color of wire	Direction	No.	Terminal	Color of wire	Direction
40	+15			80	+15		
39	+15			79	+15		
38	−15			78	−15		
37	−15			77	−15		
36	N I			76	f c 14		
35	G 1			75	f c 13		
34	G 2			74	PW		
33	G 3			73	2DTA		
32	G 4			72	SUS	YE	PB-BO7
31	G 5			71	2DTF		
30	G 6			70	I L		
29	G 7			69	ATF		
28	RMO			68	I	BR	OVT-UI-1
27	Q 4			67	RMI		
26	Q 1			66	A O	SWH	PNI-⑥7a-1
25	Q 2			65	PWM	VI	MOS-01(56)
24	Q 3			64	T R		
23	f 1			63			
22	f 2			62	L C 3		
21	f 3			61	L C 1		
20	f 4			60			
19	f 5			59	II	RE	OVT-UI-2
18	f 6			58	III	OR	OVT-UI-3
17	f 7			57	TAF		
16	f 5			56	L C 2	YE	PB-UA
15	f 6			55	OAT		
14	V 1			54	E 1	BL12	RA-E
13	V 2			53	P B	BR	PNI-①-B
12	V 3			52	P R 1		
11	V 4			51	P R 2		
10	V 5			50	TAA		
9	1DTA			49	A L		
8	K			48	1DTF		
7	K B			47	P C		
6	IV			46	OFT		
5	V			45	S L		
4	VI			44	ATA		
3	E			43	E		
2	E			42	E		
1	E			41	E		

DC power supply wiring (MU 11 ～MU18 common)

Terminal	Color of Wire	Direction	Terminal	Color of Wire	Direction
+15	RE 30	KAU - +15 (CN2-8)	E	BL 30	KAU-E (CN 2 - 13)
−15	GY 30	KAU - −15 (CN2-10)			

K and TR terminals wiring (MU 11 ～ MU 18)

Terminal	Color of Wire	Direction	Terminal	Color of Wire	Direction	ckt
TR1	BR	KAU-TR1 (CN 1 - 1)	K1	BR	KAU-K1 (CN 1 - 41)	MU11
TR2	RE	KAU-TR2 (CN 1 - 2)	K2	RE	KAU-K2 (CN 1 - 42)	MU12
TR3	OR	KAU-TR3 (CN 1 - 3)	K3	OR	KAU-K3 (CN 1 - 43)	MU13
TR4	YE	KAU-TR4 (CN 1 - 4)	K4	YE	KAU-K4 (CN 1 - 44)	MU14
TR5	GR	KAU-TR5 (CN 1 - 5)	K5	GR	KAU-K5 (CN 1 - 45)	MU15
TR6	BE	KAU-TR6 (CN 1 - 6)	K6	BBE	KAU-K6 (CN 1 - 46)	MU16
TR7	VI	KAU-TR7 (CN 1 - 7)	K7	VI	KAU-K7 (CN 1 - 47)	MU17
TR8	GY	KAU-TR8 (CN 1 - 8)	K8	GY	KAU-K8 (CN 1 - 48)	MU18

M Circuit Board Wiring (2)

M U 21

No.	Terminal	Color of Wire	Direction	No.	Terminal	Color of Wire	Direction
40	+15			80	+15		
39	+15			79	+15		
38	−15			78	−15		
37	−15			77	−15		
36	N I	S·RE	RHY5-02(18)	76	f c 14		
35	G 1			75	f c 13		
34	G 2	RE	BB-05	74	PW		
33	G 3	OR	BB-06	73	2DTA		
32	G 4	WH	TBU-22′(45)	72	SUS		
31	G 5	GG	TBU-22′(5)	71	2DTF		
30	G 6	SB	TBU-23′(44)	70	I L		
29	G 7	PK	TBU-24′(4)	69	ATE		
28	RMO			68	I		
27	Q 4			67	RMI		
26	Q 1			66	A O		
25	Q 2			65	PWM		
24	Q 3			64	T R		
23	f 1			63			
22	f 2			62	L C 3		
21	f 3			61	L C 1		
20	f 4			60			
19	f 9			59	II		
18	f 8			58	III		
17	f 7			57	TAF		
16	f 5			56	L C 2		
15	f 6			55	OAT		
14	V 1			54	E′		
13	V 2			53	P B		
12	V 3			52	P R 1		
11	V 4	GR	PN8-⑤-2	51	P R 2		
10	V 5			50	TAA		
9	1DTA			49	A L		
8	K			48	1DTF		
7	KB			47	P C	BR	TBU-25′(43)
6	Ⅳ	YE	OVT-UII-4	46	OFT		
5	V	GR	OVT-UII-5	45	S L		
4	Ⅵ	BE	OVT-UII-6	44	ATA		
3	E			43	E		
2	E			42	E		
1	E			41	E		

MU22 MU23 MU24 MU25 MU26 MU27

Same name terminals on these circuit board are. Connected at the Mother board in common.

M U 28

No.	Terminal	Color of Wire	Direction	No.	Terminal	Color of Wire	Direction
40	+15			80	+15		
39	+15			79	+15		
38	−15			78	−15		
37	−15			77	−15	GY12	MU28-(60)
36	N I			76	f c 14		
35	G 1			75	f c 13		
34	G 2			74	PW		
33	G 3			73	2DTA		
32	G 4			72	SUS		
31	G 5			71	2DTF		
30	G 6			70	I L		
29	G 7			69	ATF		
28	RMO			68	I	BR	OVT-UII-1
27	Q 1			67	RMI		
26	Q 2			66	A O	S·SB	PNI-⑥6-3
25	Q 2			65	PWM	GY	MOS-05(69)
24	Q 3			64	T R		
23	f 1			63			
22	f 2			62	L C 33		
21	f 3			61	L C 1		
20	f 4			60		GY12	MU28-−15(77)
19	f 9			59	II	RE	OVT-UII-2
18	f 8			58	III	OR	OVT-UII-3
17	f 7			57	TAF		
16	f 5			56	L C 2		
15	f 6			55	OAT		
14	V 1			54	E′		
13	V 2			53	P B		
12	V 3			52	P R 1		
11	V 4			51	P R 2		
10	V 5			50	TAA		
9	1DTA			49	A L		
8	K			48	1DTF		
7	KB			47	P C		
6	Ⅳ			46	OFT		
5	V			45	S L		
4	Ⅵ			44	ATA		
3	E			43	E		
2	E			42	E		
1	E			41	E		

Mcirluit Board wiring(3)

ML11

No.	Terminal	Color of wire	Direction	No.	Terminal	Color of wire	Direction
40	+15			80	+15		
39	+15			79	+15		
38	−15			78	−15		
37	−15			77	−15		
36	N I		PHY5-0320)	76	f c 14		
35	G 1			75	f c 13		
34	G 2	RE	BB-08	74	PW		
33	G 3	OR	BB-O9	73	2D T A		
32	G 4	WH	TBL-21(65)	72	S U S		
31	G 5	GG	TBL-22(25)	71	2D T F		
30	G 6	SB	TBL-23(64)	70	I L		
29	G 7	PK	TBL-24(24)	69	A T F		
28	R M O			68	I		
27	Q 4			67	R M I		
26	Q 1	BL12	ML11-f3(21)	66	A O		
25	Q 2	GR	PB-BO14	65	P W M		
24	Q 3			64	T R		
23	f 1	BE	PB-BO11	63			
22	f 2	OR	PB-LF	62	L C 3		
21	f 3	BL12×2	ML11-Q106 ML11-f420	61	L C 1		
20	f 4	BL12×2	ML11-f321 ML11-f506	60			
19	f 9			59	II		
18	f 8			58	III		
17	f 7			57	T A F		
16	f 5	BL12×2	ML11-f420 ML11-V104	56	L C 2		
15	f 6			55	O A T		
14	V 1	RE	PB-LO	54	E [1]		
13	V 2	BL12×2	ML11-f506 ML11-V302	53	P B		
12	V 3	BL12×2	ML11-V203 ML11-V401	52	P R 1		
11	V 4	BL12×2	ML11-V302 ML11-E(3)	51	P R 2		
10	V 5			50	T A A		
9	1D T A			49	A L		
8	K		※	48	1D T F		
7	K B			47	P C	BR	TBL-25(63)
6	Ⅳ	YE	OVT-LI-4	46	O F T		
5	Ⅴ	GR	OVT-LI-5	45	S L		
4	Ⅵ	BE	OVT-LI-6	44	A T A		
3	E	BL12	ML11-V4(11)	43	E		
2	E			42	E		
1	E			41	E		

ML12 ML13 ML14 ML15 ML16 ML17

Same name terminals on these circuit board are. Connected at the Mother board in common.

ML18

No.	Terminal	Color of wire	Direction	No.	Terminal	Color of wire	Direction
40	+15			80	+15		
39	+15			79	+15		
38	−15			78	−15		
37	−15			77	−15		
36	N I			76	f c 14		
35	G 1			75	f c 13		
34	G 2			74	PW		
33	G 3			73	2DTA		
32	G 4			72	S U S	YE	PB-BO8
31	G 5			71	2DTF		
30	G 6			70	I L		
29	G 7			69	A T F		
28	R M O			68	I	BR	OVT-L I-1
27	Q 4			67	R M I		
26	Q 1			66	A O	S PK	PN1-(66)a-1
25	Q 2			65	P W M	VI	MOS-0(25)3
24	Q 3			64	T R		※
23	f 1			63			
22	f 2			62	L C 3		
21	f 3			61	L C 1		
20	f 4			60			
19	f 9			59	II	RE	OVT-L I-2
18	f 8			58	III	OR	OVT-L I-3
17	f 7			57	T A F		
16	f 5			56	L C 2	YE	PB-LA
15	f 6			55	O A T		
14	V 1			54	E'	BL12	RA-E
13	V 2			53	P B	RE	PN1-②-B
12	V 3			52	P R 1		
11	V 4			51	P R 2		
10	V 5			50	T A A		
9	1DTA			49	A L		
8	K		※	48	1DTF		
7	K B			47	P C		
6	Ⅳ			46	O F T		
5	Ⅴ			45	S L		
4	Ⅵ			44	A T A		
3	E			43	E		
2	E			42	E		
1	E			41	E		

DC power supply wiring (ML 11 ~ML18 common)

Terminal	Color of Wire	Direction	Terminal	Color of Wire	Direction
+15	RE 30	KAL-+15 (CN2-8)	E	BL 30	KAL-E (CN2-13)
-15	GY 30	KAL-−15 (CN2-10)			

K, TR terminal wiring (ML11 ~ ML18)

Terminal	Color of Wire	Direction	Terminal	Color of Wire	Direction	Ckt.
TR1	BR	KAL-TR1 (CN 1 - 1)	K1	BR	KAL-K1 (CN 1 - 41)	ML11
TR2	RE	KAL-TR2 (CN 1 - 2)	K2	RE	KAL-K2 (CN 1 - 42)	ML12
TR3	OR	KAL-TR3 (CN 1 - 3)	K3	OR	KAL-K3 (CN 1 - 43)	ML13
TR4	YE	KAL-TR4 (CN 1 - 4)	K4	YE	KAL-K4 (CN 1 - 44)	ML14
TR5	GR	KAL-TR5 (CN 1 - 5)	K5	GR	KAL-K5 (CN 1 - 45)	ML15
TR6	BE	KAL-TR6 (Cn 1 - 6)	K6	BE	KAL-K6 (CN 1 - 46)	ML16
TR7	VI	KAL-TR7 (CN 1 - 7)	K7	VI	KAL-K7 (CN 1 - 47)	ML17
TR8	GR	KAL-TR8 (CN 1 - 8)	K8	GR	KAL-K8 (CN 1 - 48)	ML18

M Circuit Board Wiring (4)

Same name terminals on ML21 ckt board are connected to the Same name terminal, on ML18 ckt board at the Mother board in common.

Same name terminals on these ML circuit boards are connected at the Mother board in common.

ML21

No.	Terminal	Color of wire	Direction	No.	Terminal	Color of wire	Direction
40	+15			80	+15		
39	+15			79	+15		
38	−15			78	−15		
37	−15			77	−15		
36	N I	S RE	RHY5-04(22)	76	f c 14		
35	G 1			75	f c 13		
34	G 2	RE	BB-011	74	PW		
33	G 3	PK	BB-012	73	2DTA		
32	G 4	WH	TBL-21′(45)	72	S U S		
31	G 5	GG	TBL-22′(5)	71	2DTF		
30	G 6	SB	TBL-23′(44)	70	I L		
29	G 7	PK	TBL-24′(4)	69	A T F		
28	R M O			68	I		
27	Q 4			67	R M I		
26	Q 1			66	A O		
25	Q 2			65	P W M		
24	Q 3			64	T R		
23	f 1			63			
22	f 2			62	L C 3		
21	f 3			61	L C 1		
20	f 4			60			
19	f 9			59	II		
18	f 8			58	III		
17	f 7			57	T A F		
16	f 5			56	L C 2		
15	f 6			55	O A T		
14	V 1			54	E′		
13	V 2			53	P B		
12	V 3			52	P R 1		
11	V 4	BE	PN8-⑥-2	51	P R 2		
10	V 5			50	T A A		
9	2DTA			49	A L		
8	K			48	1DTF		
7	K B			47	P C	BR	TBL-25′(43)
6	IV	YE	OVT-LII-4	46	O F T		
5	V	GR	OVT-LII-5	45	S L		
4	VI	BE	OVT-LII-6	44	A T A		
3	E			43	E		
2	E			42	E		
1	E			41	E		

ML22 ML23 ML24 ML25 ML26 ML27

ML28

No.	Terminal	Color of wire	Direction	No.	Terminal	Color of wire	Direction
40	+15			80	+15		
39	+15			79	+15		
38	−15			78	−15		
37	−15			77	−15		
36	N I			76	f c 14		
35	G 1			75	f c 13		
34	G 2			74	PW		
33	G 3			73	2DTA		
32	G 4			72	S U S		
31	G 5			71	2DTF		
30	G 6			70	I L		
29	G 7			69	A T F		
28	R M O			68	I	BR	OVT-LII-1
27	Q 4			67	R M I		
26	Q 1			66	A O	S RE	PN1-⑥7b-3
25	Q 2			65	P W M	WH	MOS-0667)
24	Q 3			64	T R		
23	f 1			63			
22	f 2			62	L C 3		
21	f 3			61	L C 1		
20	f 4			60			
19	f 9			59	II	RE	OVT-LII-2
18	f 8			58	III	OR	OVT-LII-3
17	f 7			57	T A F		
16	f 5			56	L C 2		
15	f 6			55	O A T		
14	V 1			54	E′		
13	V 2			53	P B		
12	V 3			52	P R 1		
11	V 4			51	P R 2		
10	V 5			50	T A A		
9	1DTA			49	A L		
8	K			48	1DTF		
7	K B			47	P C		
6	IV			46	O F T		
5	V			45	S L		
4	VI			44	A T A		
3	E			43	E		
2	E			42	E		
1	E			41	E		

M Circuit Board Wiring (5)

M P 11

No.	Termnal	Color of wire	Direction	No.	Termin a l	Color of wire	Direction
40	+15			80	+15		
39	+15			79	+15		
38	−15			78	−15		
37	−15			77	−15		
36	N I	S-OR	RHY5-05(24)	76	fc14		
35	G 1			75	fc13		
34	G 2	RE	BB-014	74	PW		
33	G 3	OR	BB-015	73	2DTA		
32	G 4	WH	TBP-21(65)	72	SUS	GR	PB-BO9
31	G 5	GG	TBP-22(25)	71	2DTF		
30	G 6	SB	TBP-23(64)	70	I L		
29	G 7	PK	TBP-24(24)	69	ATF		
28	RMO			68	I	BR	OVT-PI-1
27	Q 4			67	RMI		
26	Q 1			66	A O	S-OR	PN1-⑥8a-1
25	Q 2	VI	PB-B015	65	PWM	GR	MOS-03(61)
24	Q 3			64	T R	OR	KP-K1(49)
23	f 1	BR	PB-B012	63			
22	f 2	YE	KP-KB(61)	62	LC3		
21	f 3			61	LC1		
20	f 4			60			
19	f 9			59	II	RE	OVT-PI-2
18	f 8			58	III	OR	OVT-PI-3
17	f 7			57	TAF		
16	f 5			56	LC2		
15	f 6			55	OAT		
14	V 1			54	E'	BL12	RA-E
13	V 2			53	P B	OR	PN1-③-B
12	V 3			52	PR1		
11	V 4			51	PR2		
10	V 5			50	TAA		
9	1DTA			49	A L		
8	K	RE	KP-K2(50)	48	1DTF		
7	K B	BR	KP-O(48)	47	P C	BR	TBP-25(63)
6	IV	YE	OVT-PI-4	46	OFT		
5	V	GR	OVT-PI-5	45	S L		
4	VI	BR	OVT-PI-6	44	ATA		
3	E			43	E		
2	E			42	E		
1	E			41	E		

M P 21

No.	Terminal	Color of Wie	Direction	No.	Terminal	Color of Wie	Direction
40	+15			80	+15		
39	+15			79	+15		
38	−15			78	−15		
37	−15			77	−15		
36	N 1	S-YE	RHY5-06(29)	76	f c 14		
35	G 1			75	f c 13		
34	G 2	RE	BB-017	74	PW		
33	G 3	OR	BB-018	73	2DTA		
32	G 4	WH	TBP-21'(45)	72	SUS		
31	G 5	GG	TBP-22'(5)	71	2DTF		
30	G 6	SB	TBP-23'(44)	70	I L		
29	G 7	PK	TBP-24'(4)	69	ATF		
28	RMO			68	I		
27	Q 4			67	RMI		
26	Q 1			66	A O		
25	Q 2			65	PWM		
24	Q 3			64	T R		
23	f 1			63			
22	f 2			62	L C 3		
21	f 3			61	L C 1		
20	f 4			60			
19	f 9			59	II		
18	f 8			58	III		
17	f 7			57	TAF		
16	f 5			56	L C 2		
15	f 6			55	OAT		
14	V 1			54	E'		
13	V 2			53	P B		
12	V 3			52	P R 1		
11	V 4	VI	PN8-⑦-2	51	P R 2		
10	V 5			50	TAA		
9	DTA			49	A L		
8	K			48	1DTF		
7	K B			47	P C	BR	TBP-25'(43)
6	IV	YE	OVT-PII-4	46	OET		
5	V	GR	OVT-PII-5	45	S L		
4	VI	BE	OVT-PII-6	44	ÂTA		
3	E			43	E		
2	E			42	E		
1	E			41	E		

M P 31

No.	Terminal	Color of Wire	Direction	No.	Terminal	Color of Wire	Direction
40	+15			80	+15		
39	+15			79	+15		
38	−15			78	−15		
37	−15			77	−15		
36	N 1			76	f C14		
35	G 1			75	f C13		
34	G 2			74	PW		
33	G 3			73	2DTF		
32	G 4			72	SUS		
31	G 5			71	2DTF		
30	G 6			70	I L		
29	G 7			69	ATF		
28	RMO			68	I	BR	OVT-PII-1
27	Q 4			67	RMI		
26	Q 1			66	A O	S-GR	PNI-⑥8⑥-3
25	Q 2			65	PWM	BE	MOS-07(65)
24	Q 3			64	T R		
23	f 1			63			
22	f 2			62	L C 3		
21	f 3			61	L C 1		
20	f 4			60			
19	f 9			59	II	RE	OVT-PII-2
18	f 8			58	III	OR	OVT-PII-3
17	f 7			57	TAF		
16	f 5			56	L C 2		
15	f 6			55	OAT		
14	V 1			54	E'		
13	V 2			53	P B		
12	V 3			52	P R 1		
11	V 4	GY	PN7-⑧-2	51	P R 2		
10	V 5			50	TAA		
9	1DTA			49	A L		
8	K			48	1DTF		
7	K B			47	P C		
6	IV			46	OFT		
5	V			45	S L		
4	VI			44	ATA		
3	E			43	E		
2	E			42	E		
1	E			41	E		

M S

No.	Terminal	Color of wire	Direction	No.	Terminal	Color of wire	Direction
40	+15			80	+15		
39	+15			79	+15		
38	−15			78	−15	GY12	MS-PB(53)
37	−15			77	−15		
36	N I	S-GR	RHY5-07(31)	76	fc14	GR	TBS-17(67)
35	G 1			75	fc13	YE	TBS-16(28)
34	G 2	VI	TBS-19(66)	74	PW	RE	TBS-14(29)
33	G 3	GY	TBS-20(26)	73	2DTA	OR	TBS-3(74)
32	G 4	WH	TBS-21(65)	72	SUS	YE	PN2-⑫-2
31	G 5	GG	TBS-22(25)	71	2DTF	VI	TBS-7(72)
30	G 6		TBS-23(64)	70	I L	GR	TBS-8(32)
29	G 7	PK	TBS-24(24)	69	ATF	GR	TBS-5(73)
28	RMO			68	I	BR	OVT-S-1
27	Q 4	BR	TBS-13(69)	67	SMI	S-GGS	PN2-⑩
26	Q 3	YE	PN3-⑭-C	66	A O		
25	Q 2	GG	PN2-⑱-2	65	PWM	VI	MOS-04(70)
24	Q 3	PK	TBS-12(30)	64	T R		
23	f 1	WH	PN2-⑰-2	63			
22	f 2	PK	PN3-⑩-C	62	LC3		
21	f 3	GY	PN3-⑥-C	61	LC1	VI	TBS-15(68)
20	f 4	OR	PN3-⑬-C	60			
19	f 9			59	II	RE	OVT-S-2
18	f 8		TBS-11(70)	58	III	OR	OVT-S-3
17	f 7			57	TAF	GR	PN3-③-C
16	f 5	RE	PN2-②-2	56	LC2	BR	PN3-SR-R4
15	f 6	GG	TBS-10(31)	55	OAT		
14	V 1	GR	PN2-SH-02	54	E'	BL12	RA-E
13	V 2	VI	PN3-⑤-C	53	P B	GY12	MS--15(78)
12	V 3	OR	PN2-SH-MS	52			
11	V 4			51			
10	V 5			50	TAA	OR	PN--⑪-2
9	1DTA	RE	TBS-2(35)	49	A L	WH	TBS-9(71)
8	K	BR	PN7-⑩-C	48	1DTF	BE	TBS-9(32)
7	IV			47	P C	BR	TBS-25(63)
6	IV	YE	OVT-S-4	46	OFT		
5	V	GR	OVT-S-5	45	S L	YE	TBS-4(34)
4	VI	BE	OVT-S-6	44	ATA	BR	TBS-1(75)
3	E			43	E		
2	E			42	E		
1	E			41	E		

BA (Complementary Buffer Amplifier) Circuit Diagram

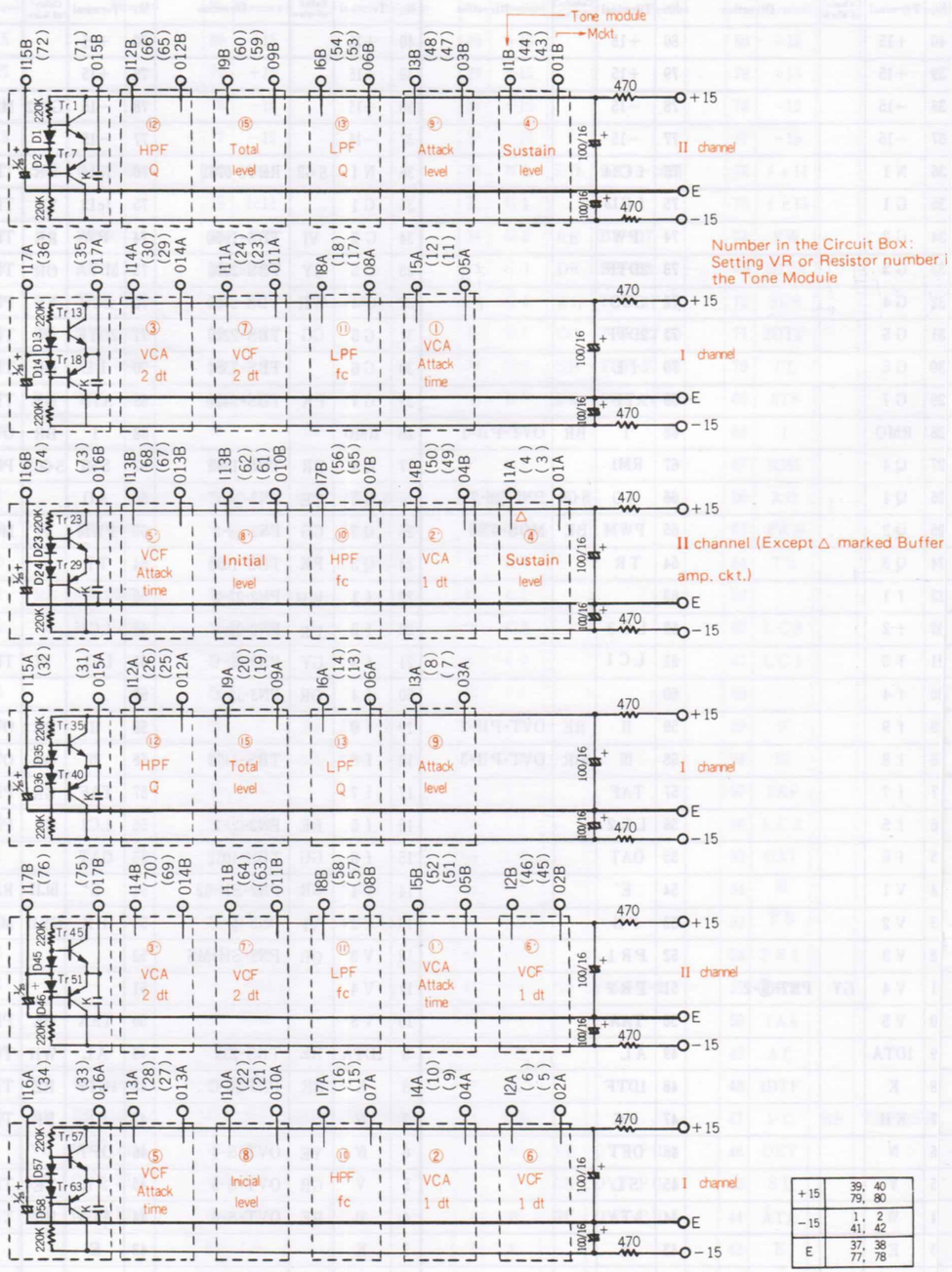

+15	39, 40 79, 80
−15	1, 2 41, 42
E	37, 38 77, 78

BA Circuit Board

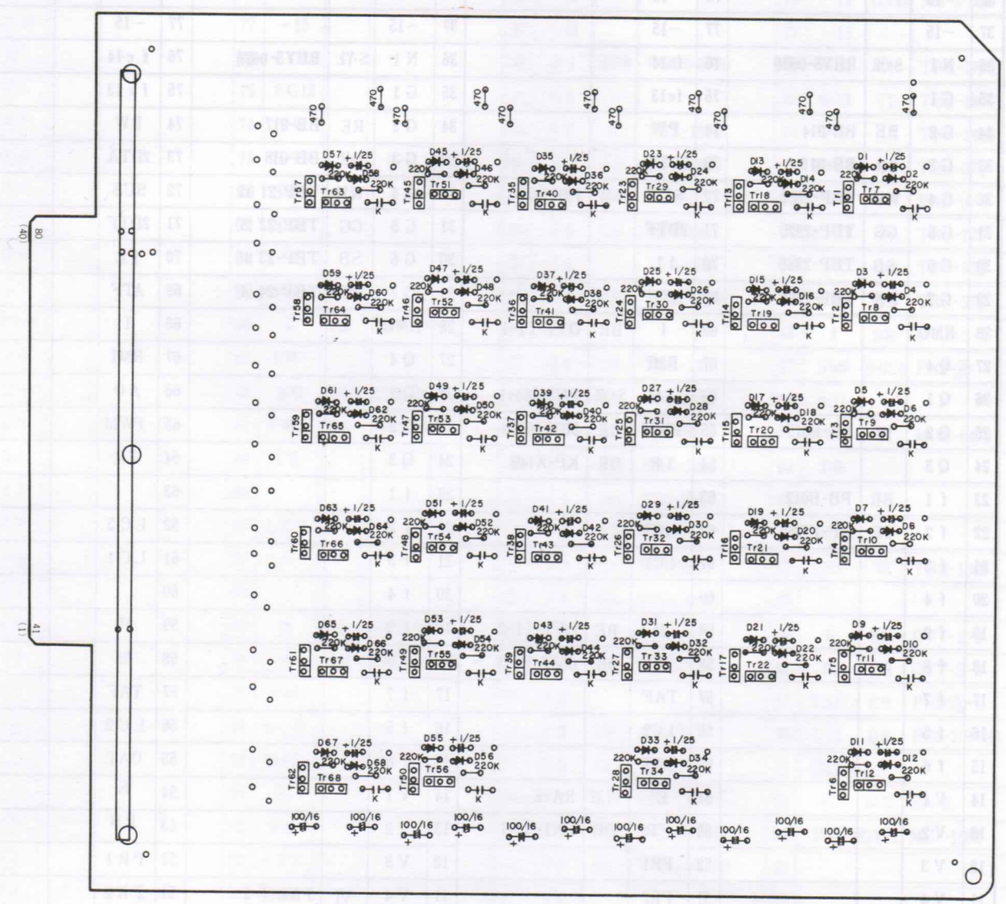

Note) 1. Transistor
Tr1~6, 13~17
23~28, 35~39
45 50 57~62 } 2SC458 (C)
Tr7~12, 18~22
29~34, 40~44
51~56, 63~68 } 2SA561 (Y)

2. Diode
D1~68 : 1S2473 (VE)

3. K marked : Ceramic Capabitor 1000P (K)

BA Circuit Board Wiring

B A U							
No.	Terminal	Color of wire	Direction	No.	Terminal	Color of wire	Direction
40	+15			80	+15		
39	+15			79	+15		
38	−15			78	−15		
37	−15			77	−15		
36	I 17A	GR	TBU-17(67)	76	I 17B	GR	TBU-17'(47)
35	O17A			75	O17B		
34	I 16A	YE	TBU-16(28)	74	I 16B	YE	TBU-16'(8)
33	O16A			73	O16B		
32	I 15A	RE	TBU-14(29)	72	I 15B	RE	TBU-14'(9)
31	O15A			71	O15B		
30	I 14A	OR	TBU- 3(74)	70	I 14B	OR	TBU- 3'(54)
29	O14A			69	O14B		
28	I 13A	GR	TBU- 5(73)	68	I 13B	GR	TBU- 5'(53)
27	O13A			67	O13B		
26	I 12A	PK	TBU-12(30)	66	I 12B	PK	TBU-12'(10)
25	I 12A			65	O12B		
24	I 11A	VI	TBU- 7(72)	64	I 11B	VI	TBU- 7'(52)
23	O11A			63	O11B		
22	I 10A	GY	TBU- 8(32)	62	I 10B	GY	TBU- 8'(12)
21	O10A			61	O10B		
20	I 9 A	OR	TBU-15(68)	60	I 9 B	OR	TBU-15'(48)
19	O 9 A			59	O 9 B		
18	I 8 A	SB	TBU-11(70)	58	I 8 B	SB	TBU-11'(50)
17	O 8 A			57	O 8 B		
16	I 7 A	GG	TBU-10(31)	56	I 7 B	GG	TBU-10'(11)
15	O 7 A			55	O 7 B		
14	I 6 A	BR	TBU-13(69)	54	I 6 B	BR	TBU-13'(49)
13	O 6 A			53	O 6 B		
12	I 5 A	BR	TBU- 1(75)	52	I 5 B	BR	TBU- 1'(55)
11	O 5 A			51	O 5 B		
10	I 4 A	RE	TBU- 2(35)	50	I 4 B	RE	TBU- 2'(15)
9	O 4 A			49	O 4 B		
8	I 3 A	WH	TBU- 9(71)	48	I 3 B	WH	TBU- 9'(51)
7	O 3 A			47	O 3 B		
6	I 2 A	BE	TBU- 6(33)	46	I 2 B	BE	TBU- 6'(13)
5	O 2 A			45	O 2 B		
4	I 1 A	YE	TBU- 4(34)	44	I BA	YE	TBU- 4'(14)
3	O 1 A			43	OBA		
2	E			42	E		
1	E			41	E		

B A L							
No.	Terminal	Color of wire	Direction	No.	Terminal	Color of wire	Direction
40	+15			80	+15		
39	+15			79	+15		
38	−15			78	−15		
37	−15			77	−15		
36	I 17A	GR	TBL-17(67)	76	I 17B	GR	TBL-17'(47)
35	O17A			75	O17B		
34	I 16A	YE	TBL-16(28)	74	I 16B	YE	TBL-16'(8)
33	O16A			73	O16B		
32	I 15A	RE	TBL-14(29)	72	I 15B	RE	TBL-14'(9)
31	O15A			71	O15B		
30	I 14A	OR	TBL- 3(74)	70	I 14B	OR	TBL- 3'(54)
29	O14A			69	O14B		
28	I 13A	GR	TBL- 5(73)	68	I 13B	GR	TBL- 5'(53)
27	O13A			67	O13B		
26	I 12A	PK	TBL-12(30)	66	I 12B	PK	TBL-12'(10)
25	O12A			65	O12B		
24	I 11A	VI	TBL- 7(72)	64	I 11B	VI	TBL- 7'(52)
23	O11A			63	O11B		
22	I 10A	GY	TBL- 8(32)	62	I 10B	GY	TBL- 8'(12)
21	O10A			61	O10B		
20	I 9 A	OR	TBL-15(68)	60	I 9 B	OR	TBL-15'(48)
19	O 9 A			59	O 9 B		
18	I 8 A	SB	TBL-11(70)	58	I 8 B	SB	TBL-11'(50)
17	O 8 A			57	O 8 B		
16	I 7 A	GG	TBL-10(31)	56	I 7 B	GG	TBL-10'(11)
15	O 7 A			55	O 7 B		
14	I 6 A	BR	TBL-13(69)	54	I 6 B	BR	TBL-13'(49)
13	O 6 A			53	O 6 B		
12	I 5 A	BR	TBL- 1(75)	52	I 5 B	BR	TBL- 1'(55)
11	O 5 A			51	O 5 B		
10	I 4 A	RE	TBL- 2(35)	50	I 4 B	RE	TBL- 2'(15)
9	O 4 A			49	O 4 B		
8	I 3 A	WH	TBL- 9(71)	48	I 3 B	WH	TBL- 9'(51)
7	O 3 A			47	O 3 B		
6	I 2 A	BE	TBL- 6(33)	46	I 2 B	BE	TBL- 6'(13)
5	O 2 A			45	O 2 B		
4	I 1 A	YE	TBL- 4(34)	44	I 1 B	YE	TBL- 4'(14)
3	O 1 A			43	O 1 B		
2	E			42	E		
1	E			41	E		

B A P							
No.	Terminal	Color of wire	Direction	No.	Terminal	Color of wire	Direction
40	+15			80	+15		
39	+15			79	+15		
38	−15			78	−15		
37	−15			77	−15		
36	I 17A	GR	TBP-17(67)	76	I 17B	GR	TBP-17'(47)
35	O17A			75	O17B		
34	I 16A	YE	TBP-16(28)	74	I 16B	YE	TBP-16'(8)
33	O16A			73	O16B		
32	I 15A	RE	TBP-14(29)	72	I 15B	RE	TBP-14'(9)
31	O15A			71	O15B		
30	I 14A	OR	TBP-3(74)	70	I 14B	OR	TBP-3'(54)
29	O14A			69	O14B		
28	I 13A	GR	TBP-5(73)	68	I 13B	GR	TBP-5'(53)
27	O13A			67	O13B		
26	I 12A	PK	TBP-12(30)	66	I 12B	PK	TBP-12'(10)
25	O12A			65	O12B		
24	I 11A	VI	TBP-7(72)	64	I 11B	VI	TBP-7'(52)
23	O11A			63	O11B		
22	I 10A	GY	TBP-8(32)	62	I 10B	GY	TBP-8'(12)
21	O10A			61	O10B		
20	I 9 A	OR	TBP-15(68)	60	I 9 B	OR	TBP-15'(48)
19	O 9 A			59	O 9 B		
18	I 8 A	SB	TBP-11(70)	58	I 8 B	SB	TBP-11'(50)
17	O 8 A			57	O 8 B		
16	I 7 A	GG	TBP-10(31)	56	I 7 B	GG	TBP-10(11)
15	O 7 A			55	O 7 B		
14	I 6 A	RE	TBP-13(69)	54	I 6 B	RE	TBP-13'(49)
13	O 6 A			53	O 6 B		
12	I 5 A	RE	TBP-1(75)	52	I 5 B	RE	TBP-1'(55)
11	O 5 A			51	O 5 B		
10	I 4 A	RE	TBP-2(35)	50	I 4 B	RE	TBP-2'(15)
9	O 4 A			49	O 4 B		
8	I 3 A	WH	TBP-9(71)	48	I 3 B	WH	TBP-9'(51)
7	O 3 A			47	O 3 B		
6	I 2 A	BR	TBP-6(33)	46	I 2 B	BR	TBP-6'(13)
5	O 2 A			45	O 2 B		
4	I 1 A	YE	TBP-4(34)	44	I 1 B	YE	TBP-4'(14)
3	O 1 A			43	O 1 B		
2	E			42	E		
1	E			41	E		

KP (Key Voltage for Pedal) Circuit Diagram

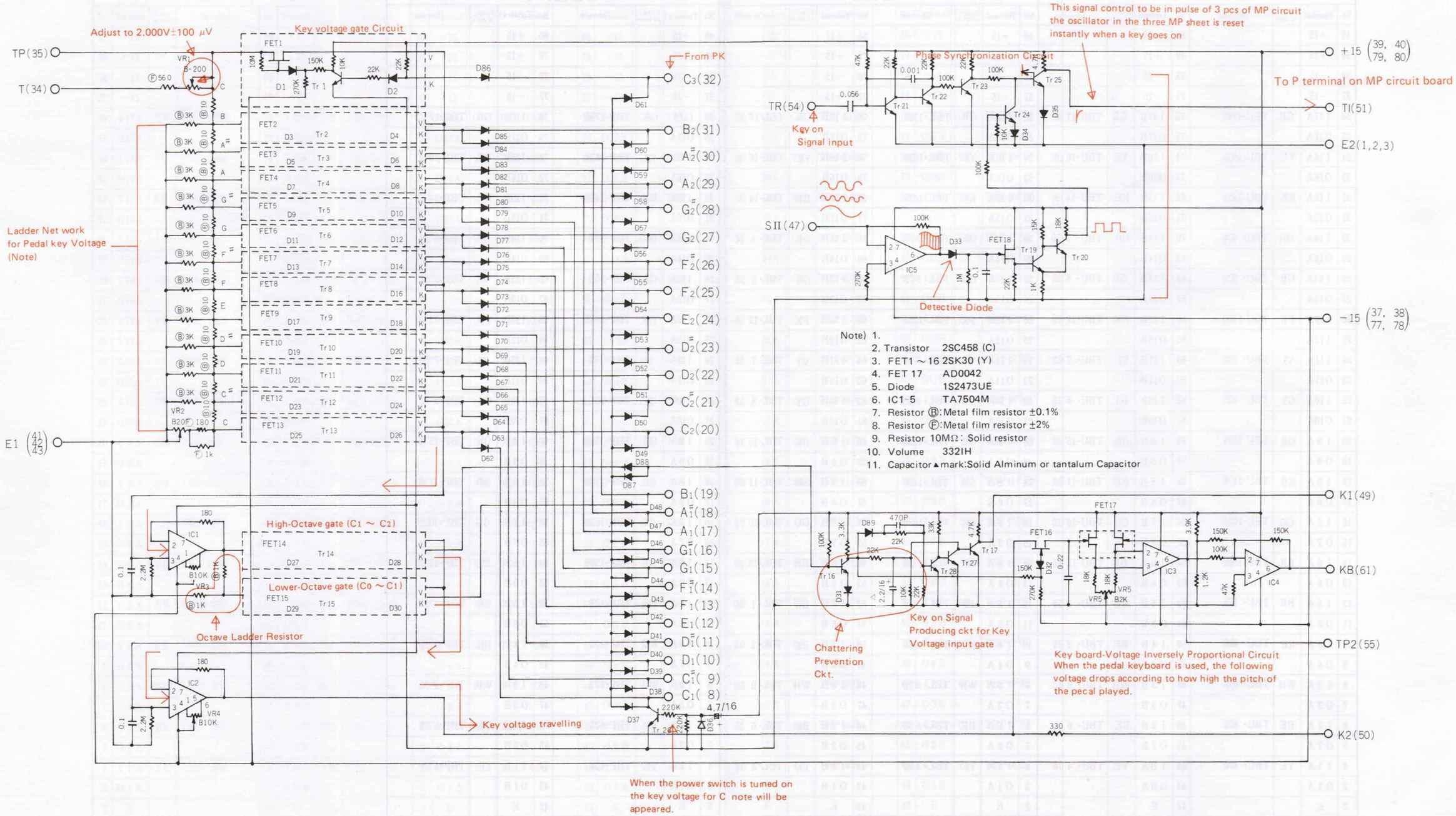

Note) 1.
2. Transistor 2SC458 (C)
3. FET1 ~ 16 2SK30 (Y)
4. FET 17 AD0042
5. Diode 1S2473UE
6. IC1-5 TA7504M
7. Resistor Ⓑ:Metal film resistor ±0.1%
8. Resistor Ⓕ:Metal film resistor ±2%
9. Resistor 10MΩ: Solid resistor
10. Volume 332IH
11. Capacitor ▲mark:Solid Alminum or tantalum Capacitor

KP Circuit Board, Adjustment, Wiring

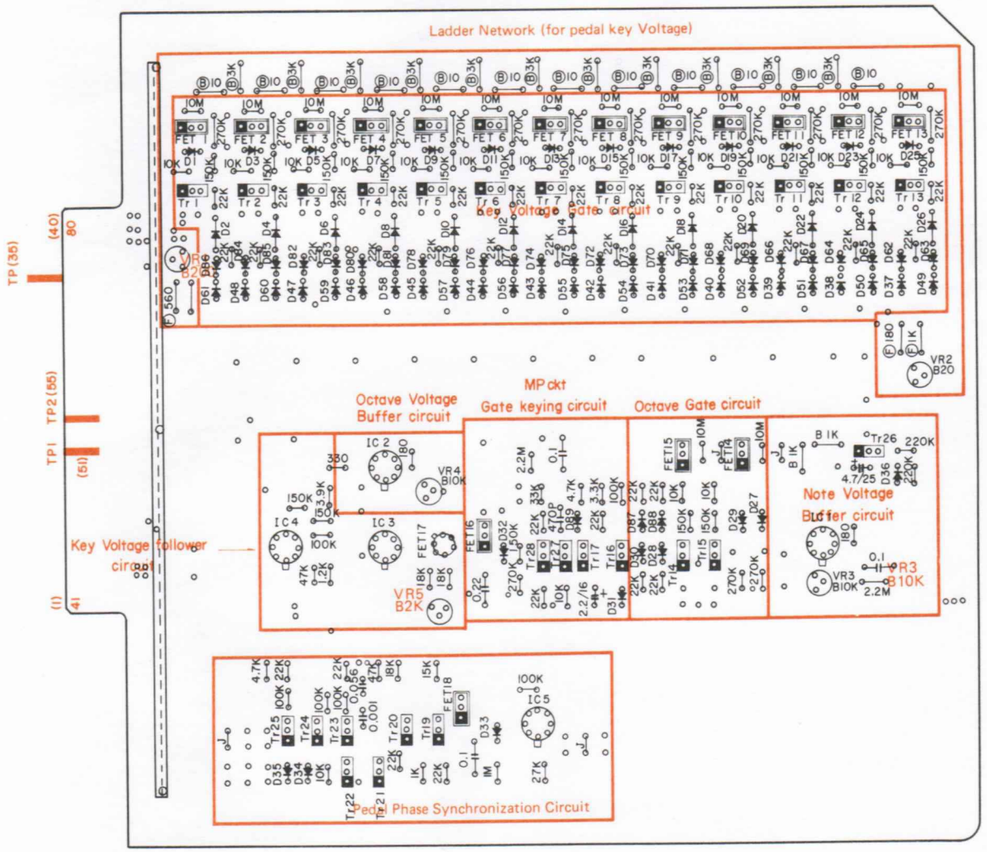

Adjustment Procedures

Conditions: Set Tune Lever on Panel 8 to center.

1. **2V adjustment -- VR1**
   Adjust for 2.000V at TP terminal (35)
2. **0.5V adjustment -- VR2**
   Adjustment for 0.5000V at FET13 source side lead.
3. **Note voltage buffer adjustment -- VR3**
   Condition: Turn CI key on.
   Adjust for 0.5000V at IC1 pin 6
4. **Octave voltage buffer adjustment -- VR4**
   Conditions: Turn CI key on.
   Adjust for 0.2500V at IC2 pin 6
5. **Key volatge reverse follow-up voltage adjustment -- VR5**
   Conditions: Turn C1 key on.
   Adjust for 0.2500V at TP2 terminal (55) or at IC3 pin 6

Ref.:
Pedal phase synchronization circuit operation check.
After repeating pedal turn-on approximately ten times, check two or three times that a pulse is present at TI terminal (51)

[T_1 terminal]

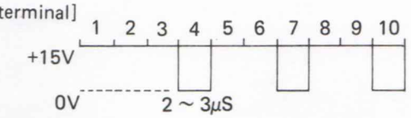

Wirings

K				P			
No.	Terminal	Color of wire	Direction	No.	Terminal	Color of wire	Direction
40	+15			80	+15		
39	+15			79	+15		
38	−15			78	−15		
37	−15			77	−15		
36				76			
35	TP			75			
34	T	YE	PN8-TU-P	74			
33				73			
32	C_3	BR	PK2-C $_2$-M	72			
31	B_2	PK	PK2-B $_1$-M	71			
30	$A^{\#}_2$	SB	PK2-A $^{\#}_1$-M	70			
29	A_2	GG	PK2-A $_1$-M	69			
28	$G^{\#}_2$	WH	PK2-G $^{\#}_1$-M	8			
27	G_2	GR	PK2-G $_1$-M	67			
26	$F^{\#}_2$	VI	PK2-F $^{\#}_1$-M	66			
25	F_2	BR	PK2-F $_1$-M	65			
24	E_2	GR	PK2-E $_1$-M	64			
23	$D^{\#}_2$	YE	PK2-D $^{\#}_1$-M	63			
22	D_2	OR	PK2-D $_1$-M	62			
21	$C^{\#}_2$	RE	PK2-C $^{\#}_1$-M	61	KB	YE	MP11-f 2(22)
20	C_2	BR	PK2-C $_1$-M	60			
19	B_1	PK	PK2-B $_0$-M	59			
18	$A^{\#}_1$	SB	PK2-A $^{\#}_0$-M	58			
17	A_1	GG	PK2-A $_0$-M	57			
16	$G^{\#}_1$	WH	PK2-G $^{\#}_0$-M	56			
15	G_1	GR	PK2-G $_0$-M	55			
14	$F^{\#}_1$	VI	PK2-F $^{\#}_0$-M	54			
13	F_1	BR	PK2-F $_0$-M	53			
12	E_1	GR	PK2-E $_0$-M	52			
11	$D^{\#}_1$	YE	PK2-D $^{\#}_0$-M	51			
10	D_1	OR	PK2-D $_0$-M	50	K 2	RE	MP11-K(8)
9	$C^{\#}_1$	RE	PK2-C $^{\#}_0$-M	49	K 1	OR	MP11-TR(64)
8	C_1	BR	PK2-C $_0$-M	48	O	BR	MP11-KB(7)
7				47			
6				46			
5				45			
4				44			
3	E	BL12	PK2-C $_2$-C	43			
2	E			42			
1	E			41			

TEK (Touch Control, Expression and Knee Lever) Circuit Diagram

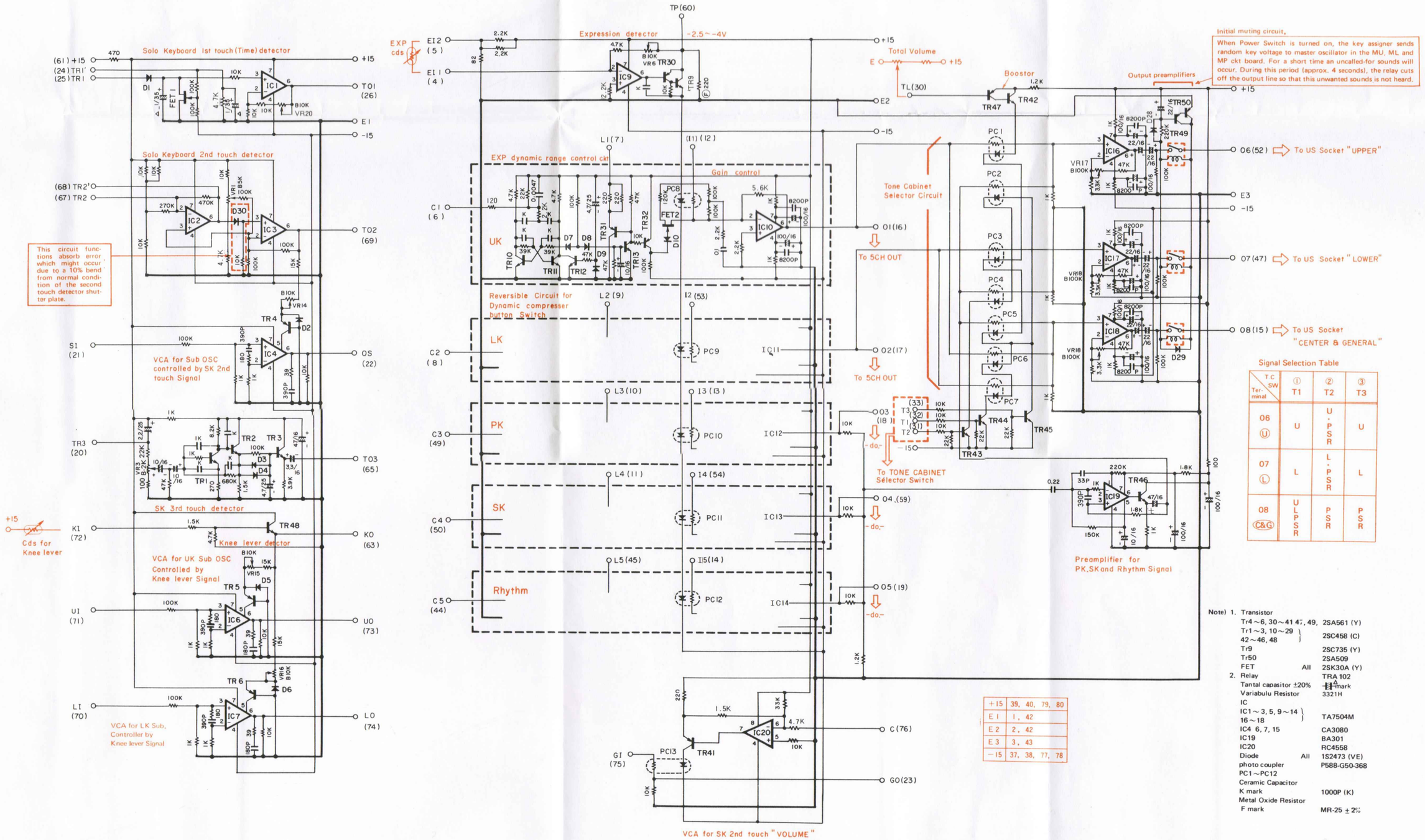

Signal Selection Table

T.C SW / Terminal	① T1	② T2	③ T3
06 (U)	U	U-PSR	U
07 (L)	L	L-PSR	L
08 (C&G)	ULPSR	PSR	PSR

+15	39, 40, 79, 80
E1	1, 42
E2	2, 42
E3	3, 43
−15	37, 38, 77, 78

Note) 1. Transistor

Tr4~6, 30~41 47, 49,		2SA561 (Y)
Tr1~3, 10~29 42~46, 48		2SC458 (C)
Tr9		2SC735 (Y)
Tr50		2SA509
FET	All	2SK30A (Y)

2. Relay TRA 102

Tantal capasitor ±20%		⊣⊢ mark
Variabulu Resistor		3321H
IC		
IC1~3, 5, 9~14 16~18		TA7504M
IC4 6, 7, 15		CA3080
IC19		BA301
IC20		RC4558
Diode	All	1S2473 (VE)
photo coupler PC1~PC12		P588-G50-368
Ceramic Capacitor K mark		1000P (K)
Metal Oxide Resistor F mark		MR-25 ±2%

TEK Circuit Board Adjustment, Wiring

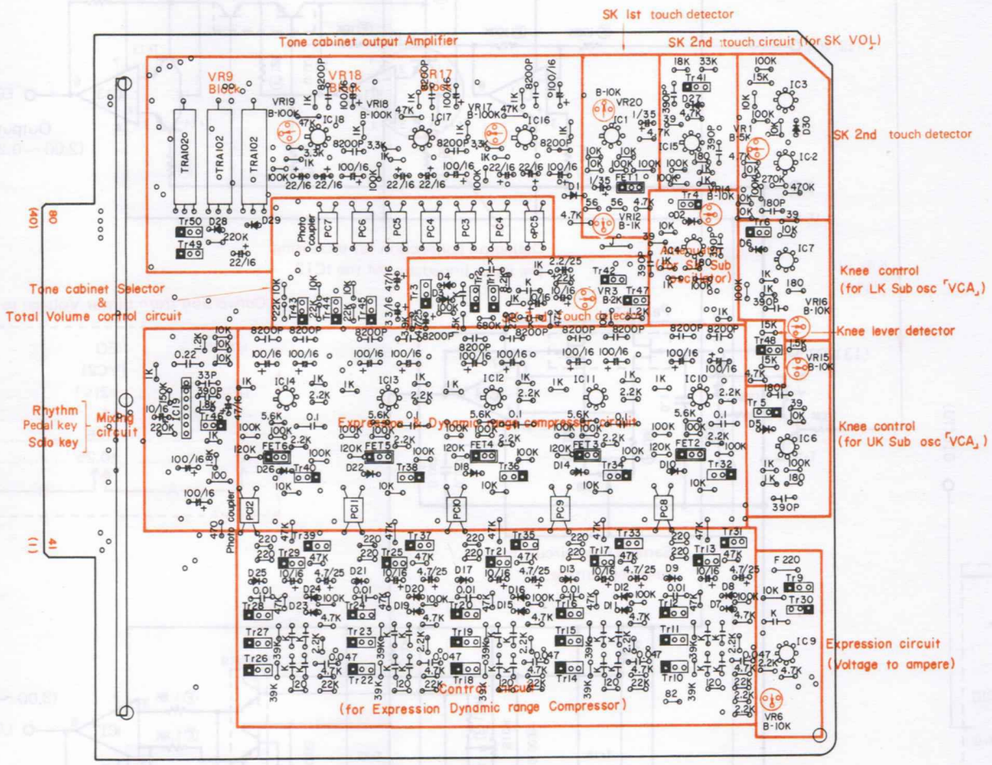

1. **SK second touch zero adjustment -- VR1**

SK-KEY	IC 2 Pin 6	Check at TO2 (69)	
No de-pressing	0.0V DC	—	Without the key depressed, adjust for 0.0V DC at pin 6 of IC2
Fullyhold down	—	9V ± 1VDC	Adjust for 9V ± 1VDC at TO2 (69) when key is fully held down

2. **Solo osc signal attenuator level adjustment -- VR14**
   With SK pressed fully, adjust VR14 so that measurement at the OS terminal (22) is the same level as the SI terminal (21). -- approx. 3Vpp.
3. **SK third touch adjustment -- VR3**
   Note: First check for abnormality on shutter board.
   Conditions: Adjust while oscillating the key to the left and right.
   Adjust for 3Vpp when a 47KΩ load is applied to TO3 (65) terminal.
   3Vpp
4. **Sub OSC upper manual attenuator level adjustment -- VR15**
   Conditions: Set knee lever to maximum.
   Adjust VR15 for the same level at the UO (73) terminal as at the UI (71).
5. **Sub OSC lower manual attenuator level adjustment -- VR16**
   Conditions: Set knee lever to maximum.
   Adjust VR16 for the same level at LO (74) as at LI (70).
6. **Exp. -2.5V voltage adjustment -- VR6**
   Conditions: Expression pedal fully depressed.
   Adjust VR6 for -2.5V at TP (60).
7. **SK first touch level adjustment -- VR20.**
   Adjust for +10V at TO1 (26) when the solo key is switched on at its fastest speed.
8. **Tone cabinet output level adjustment**
   Conditions: Set tone cabinet switch to "3". Fully depress expression pedal.
   * Upper -- VR17: Adjust for +10dB at 06 (52) when compared to 01 (16) -- i.e., approx. 3 times.
   * General -- VR18: Adjust for +10dB at 07(47)when compared to 03 (18) -- ie. aprox. 3 times.
   * Lower -- VR19: Adjust for +10dB at 08 (15) when compared to 02 (17) -- i.e., approx. 3 times

Wirings

TEK							
No.	Terminal	Color of wire	Direction	No.	Terminal	Color of wire	Direction
40	+15			80	+15		
39	+15			79	+15		
38	−15			78	−15		
37	−15			77	−15		
36				76	C	WH	PN3-⑦-C
35				75	G I		
34				74	L O	BE	PN7-③-M
33	T 3	OR	TC2-SW	73	U O	GR	PN5-④-M
32	T 1	BR	TC2-SW	72	K I	GY	KL-KN-C_2
31	T 2	RE	TC2-L I	71	U I	VI	PN4-⑧-M
30	T L	YE	PN1-⑪ T O 2	70	T O 2	VI	PN4-㉕-C
29				69	T R 2	RE	PN3-SR-TR21
28				68	T R 2	OR×2	PN2-2T-2 PN3-SR-TR3
27				67	T R 2	BE	PN2-2T-1
26	T O 1	BR	PN3-SR-TRI	66			
25	T R 1	YE	SK1-C_3-M	65	T O 3	GR	PN3-SR-TR3
24	T R 1	GR	SK1-C_6-C	64			
23	G O			63	K O		
22	S O	YE	PN3-SR-TR22	62			
21	S I	VI	PN2-⑲-C	61	+15′	OR	SK1-C_3-B
20	T R 3	GY	PN2-3T-1	60	T P		
19	O 1	S·BR	TC-5CH	59	O 2	S·RE	TC-5CH
18	O 3	S·OR	TC-5CH	58			
17	O 4	S·YE	TC-5CH	57			
16	O 5	S·GR	TC-5CH	56			
15	O 8	S·OR·S	TC-G	55			
14	I 5			54	I 4	S·VI·S	PN2-㉕-2
13	I 3			53	I 2		
12	I 1			52	O 6	S·BR·S	TC-U
11	L 4	WH	PN9-⑨a-1	51			
10	L 3	GY	PN9-⑧a-1	50	C 4	YE	PN9-⑨b-C
9	L 2	VI	PN9-⑦a-1	49	C 3	OR	PN9-⑧b-C
8	C 2	RE	PN9-⑦b-C	48			
7	L 1	RE	PN9-⑥a-1	47	O 7	S·RE·S	TC-L
6	C 1	BR	PN9-⑥b-C	46			
5	E I 2	RE	EXP-EXPCdS	45	L 5	GG	PN9-⑩a-1
4	E I 1	OR	EXP-EXPCdS	44	C 5	GR	PN9-⑩b-C
3	E′			43	E		
2	E			42	E		
1	E			41	E		

STR (Solo Key Transformation and Reverb) Circuit Diagram

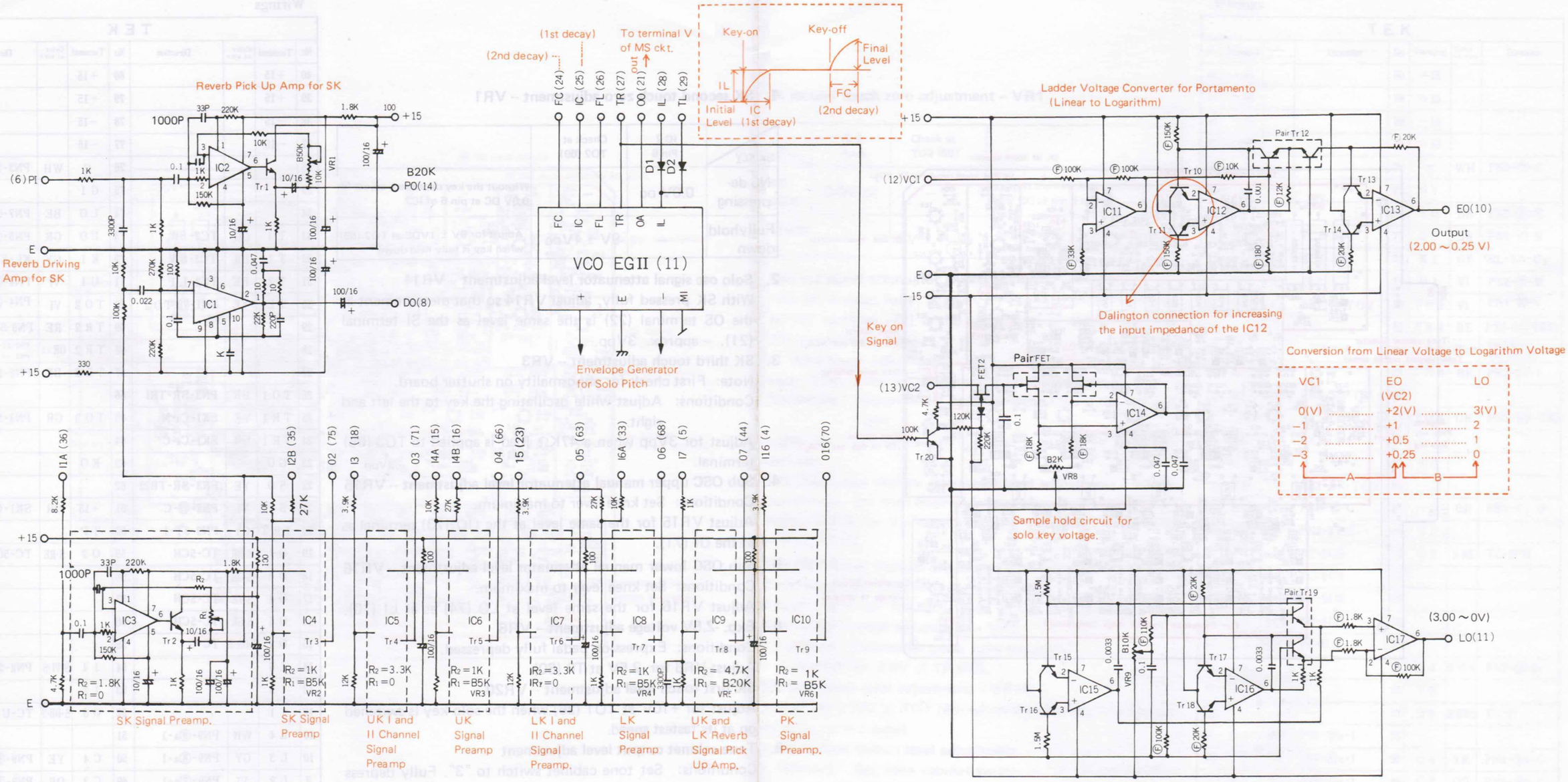

Note) 1. Transistor
Tr1~11,13~18,20 : 2SC458(C)
Tr12, 19 : 2SC458LG(P)
VBE
2. FET12 : 2SK30(Y)
FET : AD0042
3. IC
IC1 : AN374
IC2~10 : BA301
IC11~17 : TA7504M
4. Diode D1~D2 : 1S2473(VE)

5. Ceramic Capacitor
K mark 1000P (K)
33P
220P
3300P
6. Resistor F marked : metalfilm resistor
MR25±2%
7. Variable resistor : 3321H
8. D3 : 2SK30A (Y)

+15	39, 40, 79, 80
E	1, 2, 3, 41, 42, 43
−15	37, 38, 77, 78

STR Circuit Board, Adjustment, Wiring

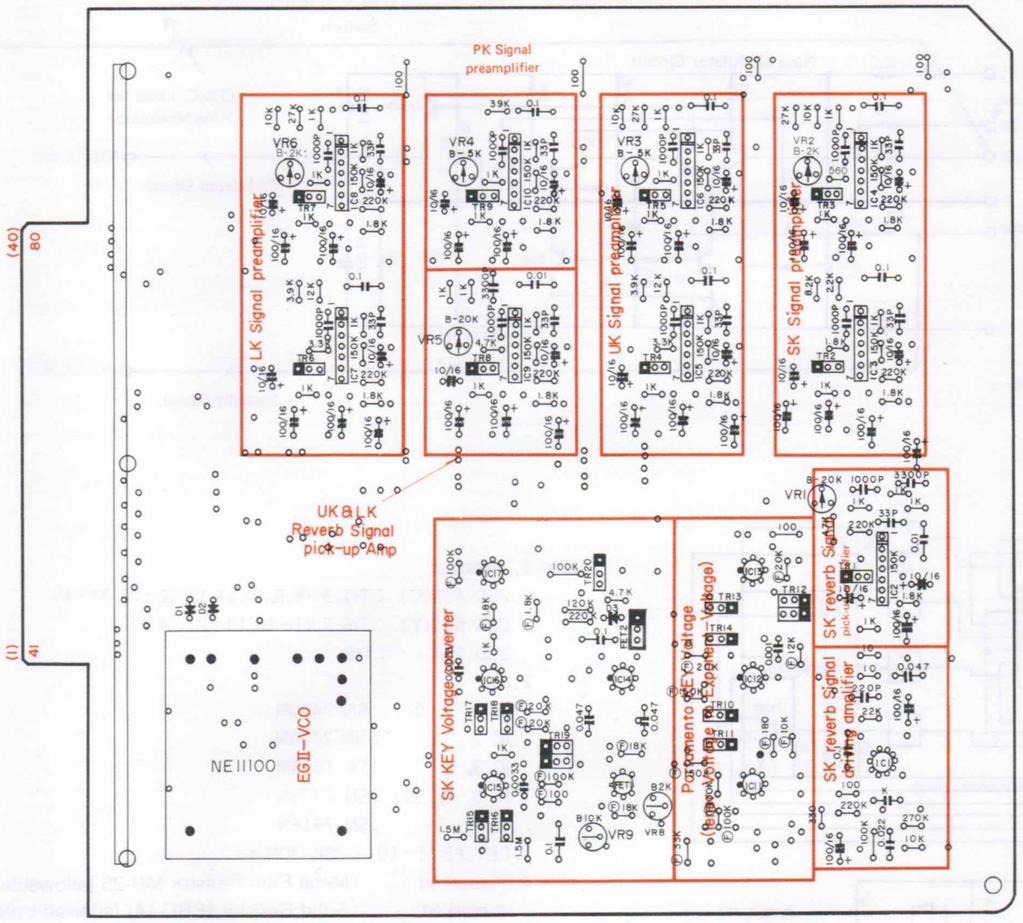

1. **Preamp output adjustment**

SK Reverb output adjustment
VR1: Adjust to -16dBm(122mV) at PO(14) Terminal

UK, LK Reverb output adjustment
VR5: Adjust to -7 dBm(346mV) at O7(44) Terminal

SK Preamp output adjustment
VR2: Adjust to -16dBm(122mV) at O2(75) Terminal

UK Preamp output adjustment
VR3: Adjust to -7 dBm(346mV) at O4(66) Terminal

LK Preamp output adjustment
VR6: Adjust to -7 dBm(346mV) at O6(68) Terminal

PK Preamp output adjustment
VR4: Adjust to -15dBm(122mV) atO16(70)Terminal

2. **LIN -- LOG Conversion amp. adjustment**

Conditions: Adjust while pressing SK C3 key.

* Reversal buffer circuit -- VR8

Adjust VR8 for the same voltage (0.25V) at IC14 pin 6 as at VC2 (13).

*LOG Conversion adjustment --VR9

Adjust VR9 for OV at the LO terminal (11) when 0.25V is present at VC2 (13).

Wiring

STR							
No.	Terminal	Color of Wire	Direction	No.	Terminal	Color of Wire	Direction
40	+15	S·BE·S		80	+15		
39	+15			79	+15		
38	−15	S·WH·S		78	−15		
37	−15			77	−15		
36	I 1 A			76	O 1		
35	I 2 B	S·BE·S	PN1-⑦⓪-2	75	O 2	VI	PN2-㉕-3
34				74			
33	I 6 A	S·WH·S	PN1-⑤⑧-2	73			
32	I 6 B			72			
31				71	O 3	RE	PN7-①a-1
30				70	O16		
29	T L	BE	PN3-④-C	69			
28	I L	GR	PN2-⑬-2	68	O 6		
27	T R			67			
26	F L	GY	PN2-⑯-2	66	O 4		
25	I C	BE	PN2-⑭-2	65			
24	F C	VI	PN2-⑮-2	64			
23	I 5	S·BR·S	PN1-⑥⑨a-4	63	O 5	OR	PN7-①b-3
22				62			
21	O 0	YE	PN2-SH-I1	61			
20				60			
19				59			
18	I 3	S·GG·S	PN1-⑥⑥a-4	58			
17				57			
16	I 4 B	S·GR·S	PN1-⑥⑨-2	56			
15	I 4 A	S·GY·S	PN1-⑤⑦-2	55			
14	P O	S·BR	PN1-⑦⓪-3	54			
13	V C 2			53			
12	V C 1			52			
11	L O	BR2	PN4-⑦-M PN2-⑤-M	51			
10	E O			50			
9	D I			49			
8	D O	S·BR·S	TC-RSa-C	48			
7				47			
6	P I	S·RE	TC-RSb-C	46			
5	I 7	S·YE	TC-RUb-C	45			
4	I 16	S·GG	PN1-⑤⑨-2	44	O 7	GR	PN1-⑥⑨-3
3	E	BL12	TC-RS	43	E		
2	E			42	E		
1	E			41	E		

SS (Solo Sub Oscillator) Circuit Diagram

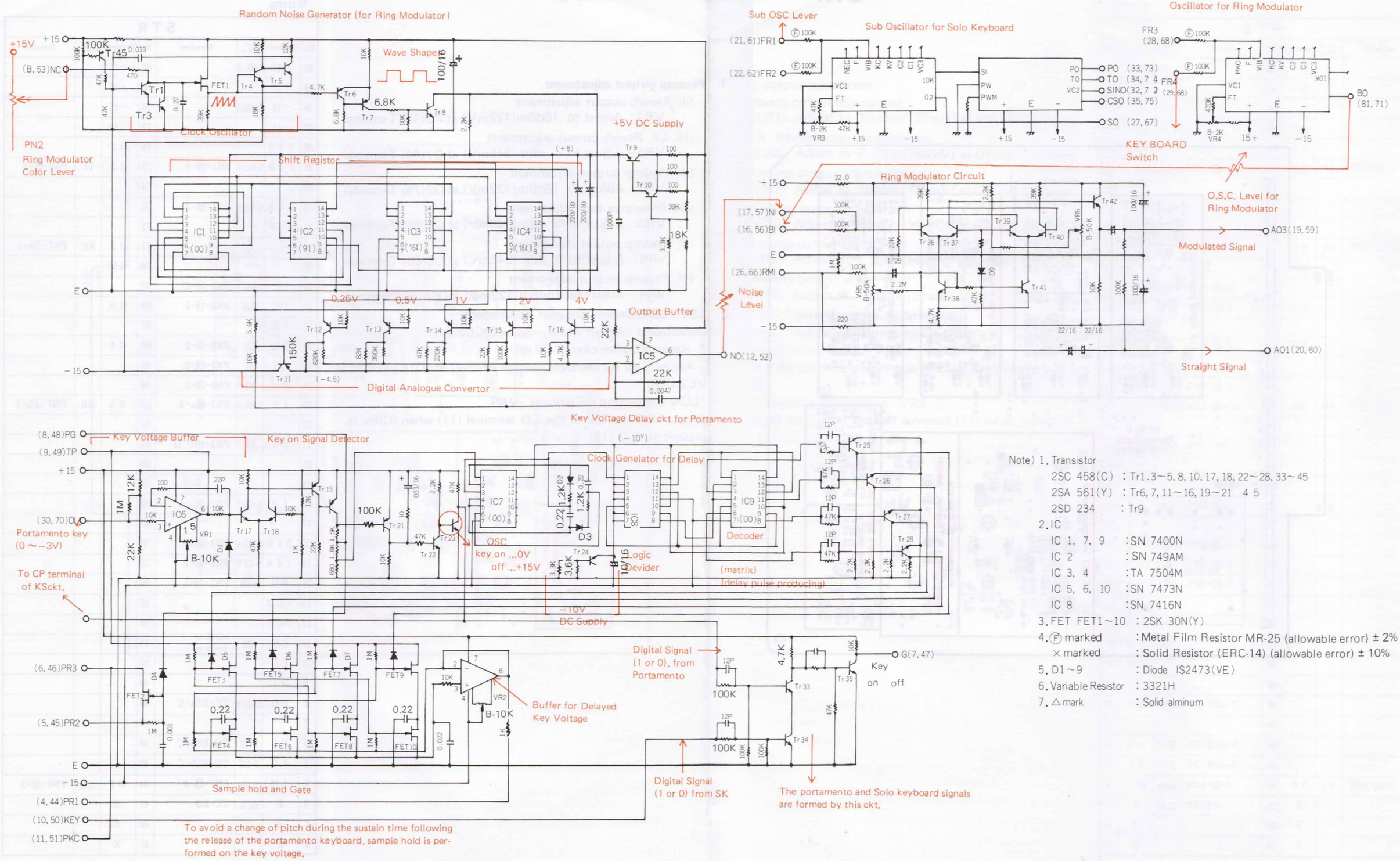

Note) 1. Transistor

2SC 458(C)	: Tr1.3~5, 8, 10, 17, 18, 22~28, 33~45
2SA 561(Y)	: Tr6, 7, 11~16, 19~21 4 5
2SD 234	: Tr9

2. IC

IC 1, 7, 9	: SN 7400N
IC 2	: SN 749AM
IC 3, 4	: TA 7504M
IC 5, 6, 10	: SN 7473N
IC 8	: SN 7416N

3. FET FET1~10 : 2SK 30N(Y)
4. Ⓕ marked : Metal Film Resistor MR-25 (allowable error) ± 2%
   × marked : Solid Resistor (ERC-14) (allowable error) ± 10%
5. D1~9 : Diode IS2473(VE)
6. Variable Resistor : 3321H
7. △ mark : Solid alminum

SS Circuit Board, Adjustment, Wiring

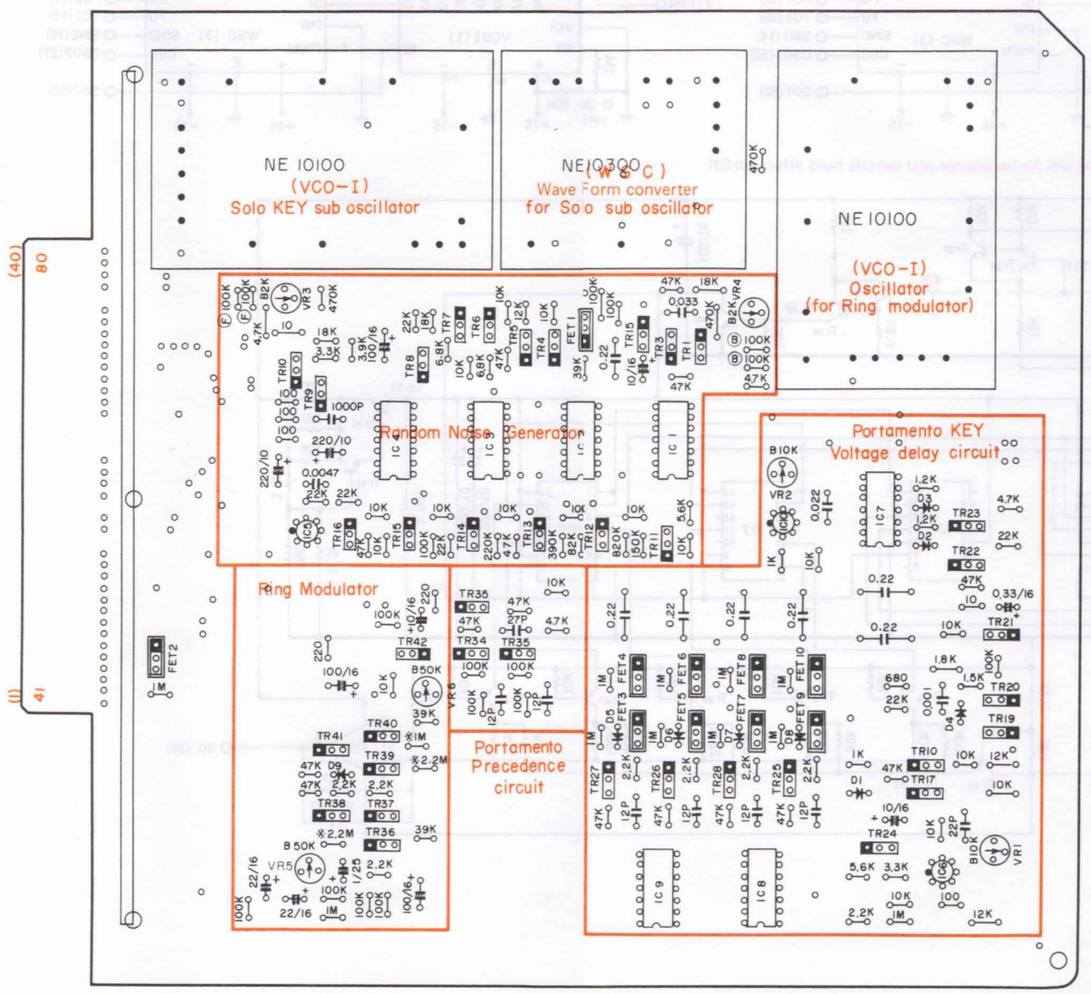

1. **Sub OSC speed adjustment**

Condition: Second touch sub OSC speed should be off.
Sub OSC speed lever should be centered.
Adjust VR3 for a 7Hz oscillation output at SO.
Ref. : Output waveforms should be as shown below.

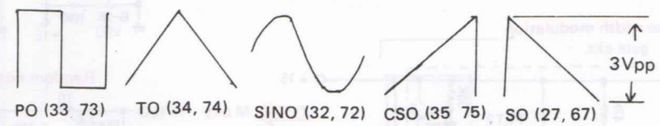

2. **Ring modulator OSC speed adjustment**

Conditions : Solo follow-up lever should be off.
Ring Mod. speed lever should be centered.
Adjust for a 7Hz oscillation output at BO (31, 71).
Ref. : Output waveform

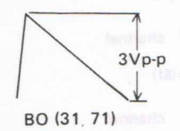

3. **Ring modulator waveform adjustment**

* Balance (1) adjustment -- VR5
* Balance (2) adjustment -- VR6

Adkist for at AO3 (19, 59).

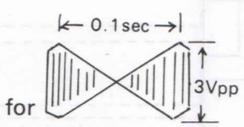

Ref. : Input waveforms should be as shown below.

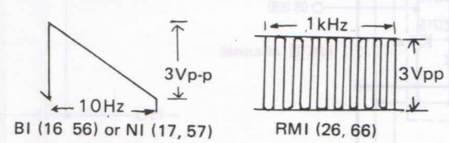

4. **(1msec.) delay circuit adjustment**

Conditions : Set OSC lever to maximum.

* IC6 zero adjustment -- VR1: Set for the same level at CI (30, 70) and TP (9, 49) -- approx. 2V.

* IC10 zero adjustment -- VR2: Check the voltage at TP (9, 49) by pressing top end of portamento strip. Adjust for same level at PRI (4, 44) as at TP -- approx. OV.

Wirings

S S							
No.	Terminal	Color of wire	Direction	No.	Terminal	Color of wire	Direction
40	+15			80	+15		
39	+15			79	+15		
38	−15			78	−15		
37	−15			77	−15		
36				76			
35	CSO	YE	PN2-⑲-M4	75	CSO		
34	TO	OR	PN2-⑲-M2	74	TO		
33	PO	BE	PN2-⑲-M5	73	PO		
32	SINO	RE	PN2-⑲-M1	72	SINO		
31	BO	OR	PN2-⑦-3	71	BO		
30	CI	YE	PN2-④-M	70	CI		
29	FR4	RE	PN2-⑤-C	69	FR4		
28	FR3	OR	PN2-⑥-2	68	FR3		
27	SO	GR	PN2-⑲-M3	67	SO		
26	RMI			66	RMI		
25				65			
24				64			
23				63			
22	FR2			62	FR2		
21	FR1	YE	PN3-⑧-C	61	FR1		
20	AO1	GG	PN2-⑩b-1	60	AO1		
19	AO3	WH	PN2-⑩a-3	59	AO3		
18				58			
17	NI	GY	PN2-⑨-2	57	NI		
16	BI	GR	PN2-⑦-2	56	BI		
15				55			
14	CP	OR	KS-CP⑩	54			
13	NC	SB	sPN2-⑧-2	53	NC		
12	NO	VI	PN2-⑨-3	52	NO		
11	PKC			51	RKC		
10	KEY	BR	KS-K2	50	KEY		
9	TP			49	FP		
8	PG			48	PG		
7	G			47	G		
6	PR3			46	PR3		
5	PR2			45	PR2		
4	PR1			44	PR1		
3	E			43	E		
2	E			42	E		
1	E			41	E		

MOS (Modulation and Sub Oscillator) Circuit Diagram

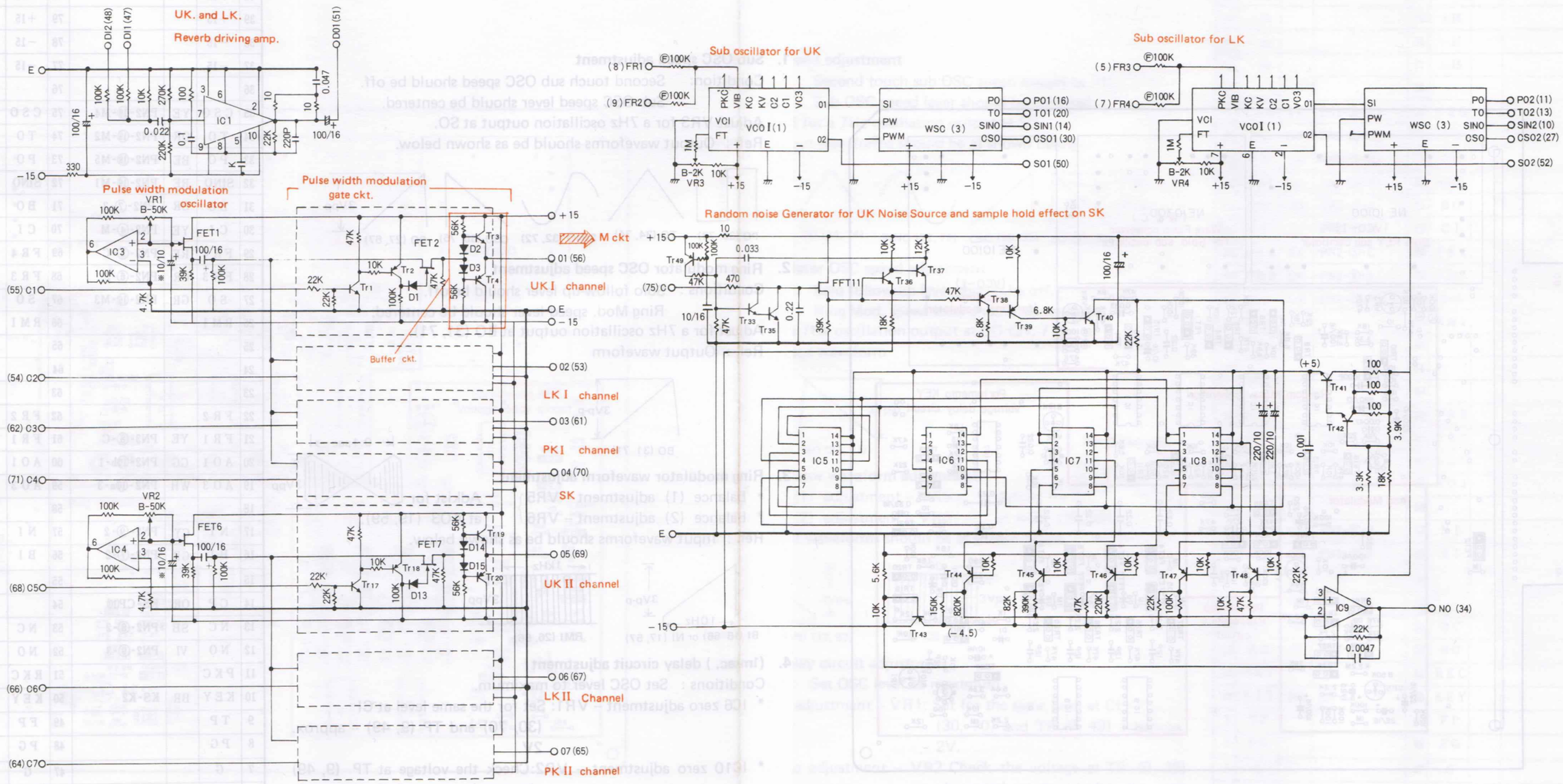

MOS Circuit Board, Adjustment, Wiring

1. Sub OSC adjustment

Conditions: 1) Solo follow-up lever should be off.
2) Set sub OSC speed lever to center.

*Upper manual sub OSC speed adjustment -- VR3
Adjust for 27Hz oscillation at SO1 (50).

*Lower manual sub OSC speed adjustment -- VR4
Adjust for 2.7Hz oscillation at SO2 (52).

Ref. : Each output waveform should be as shown below.

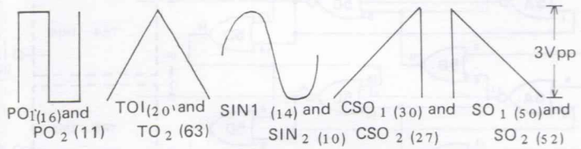

2. PWM oscillator adjustment

*PMW OSC I adjustment --VR1

Conditions: Upper manual I Channel tone modules Number ㉖ should be set to maximum.

Check that there is no output waveform distortion at 01 (56), and that 1±0.1Vpp is present.

Adjust VR1 for 4Hz. Carry out the same checks at 02 (63): LT, 03 (61) : PI and 04 (70): SI

*PWM OSC II adjustment -- VR2

Conditions: Upper manual II Chaneel tone modules Number ㉖ should be set to maximum.

Adjust VR2 for measurements similar to those above at terminal 05 (69).

Terminal 05 (69) Terminal 06 (67) Terminal 07 (65)
UII LII PII

Ref.: When module Number ㉖ maximum conditions are not possible:

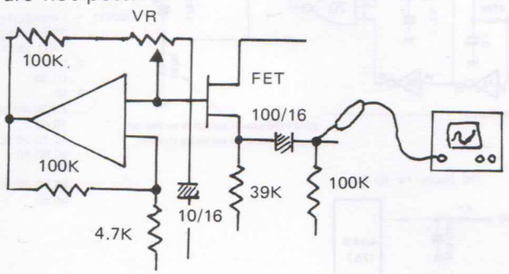

Wiring

MOS							
No.	Terminal	Color of wire	Direction	No.	Terminal	Color of wire	Direction
40	+15			80	+15		
39	+15			79	+15		
38	−15			78	−15		
37	−15			77	−15		
36	V	RE12	PN4-⑥-3	76			
35				75	C	GY	PN4-⑥-2
34	NO	RE	PN4-④-3	74			
33				73			
32				72			
31				71	C 4	GY	TBS-26(23)
30	CSO1	YE	PN4-⑧-M4	70	O 4	VI	MS-PWM(65)
29				69	O 5	GY	MU28-PWM(65)
28				68	C 5	OR	TBU-26(3)
27	CSO2	YE	PN6-㉕-M4	67	O 6	WH	ML28-PWM(65)
26				66	C 6	GR	TBL-26(3)
25				65	O 7	BE	MP31-PWM(65)
24				64	C 7	VI	TBP-26(3)
23				63	TO 2	OR	PN6-㉕-M2
22				62	C 3	BE	TBP-26(23)
21				61	O 3	GR	MP11-PWM(65)
20	TO 1	OR	PN4-⑧-M2	60	O 8	S·OR·S	
19				59	C 8		
18				58			
17				57			
16	PO 1	BE	PN4-⑧-M5	56	O 1	VI	MU18-PWM(65)
15				55	C 1	RE	TBU-26(23)
14	SIN1	RE	PN4-⑧-M5	54	C 2	YE	TBL-26(23)
13				53	O 2	VI	ML18-PWM(65)
12				52	SO 2	GR	PN6-㉕-M3
11	PO 2	BE	PN6-㉕-M5	51	DO 1	S·OR·S	TC-RUa-C
10	SIN2	RE	PN6-㉕-M1	50	SO 1	GR	PN4-⑧-M3
9	FR 2	PK	PN4-⑦-C	49			
8	FR 1	WH	PN5-⑦-C	48	DI 1		
7	FR 4	RE	PN6-㉔-C	47	DI 2		
6				46			
5	FR 3	WH	PN7-⑥-C	45	PRO1		
4				44	PRI1		
3	E			43	E		
2	E			42	E		
1	E			41	E		

PSM (Preset Tone Selection and Memory) Circuit Diagram

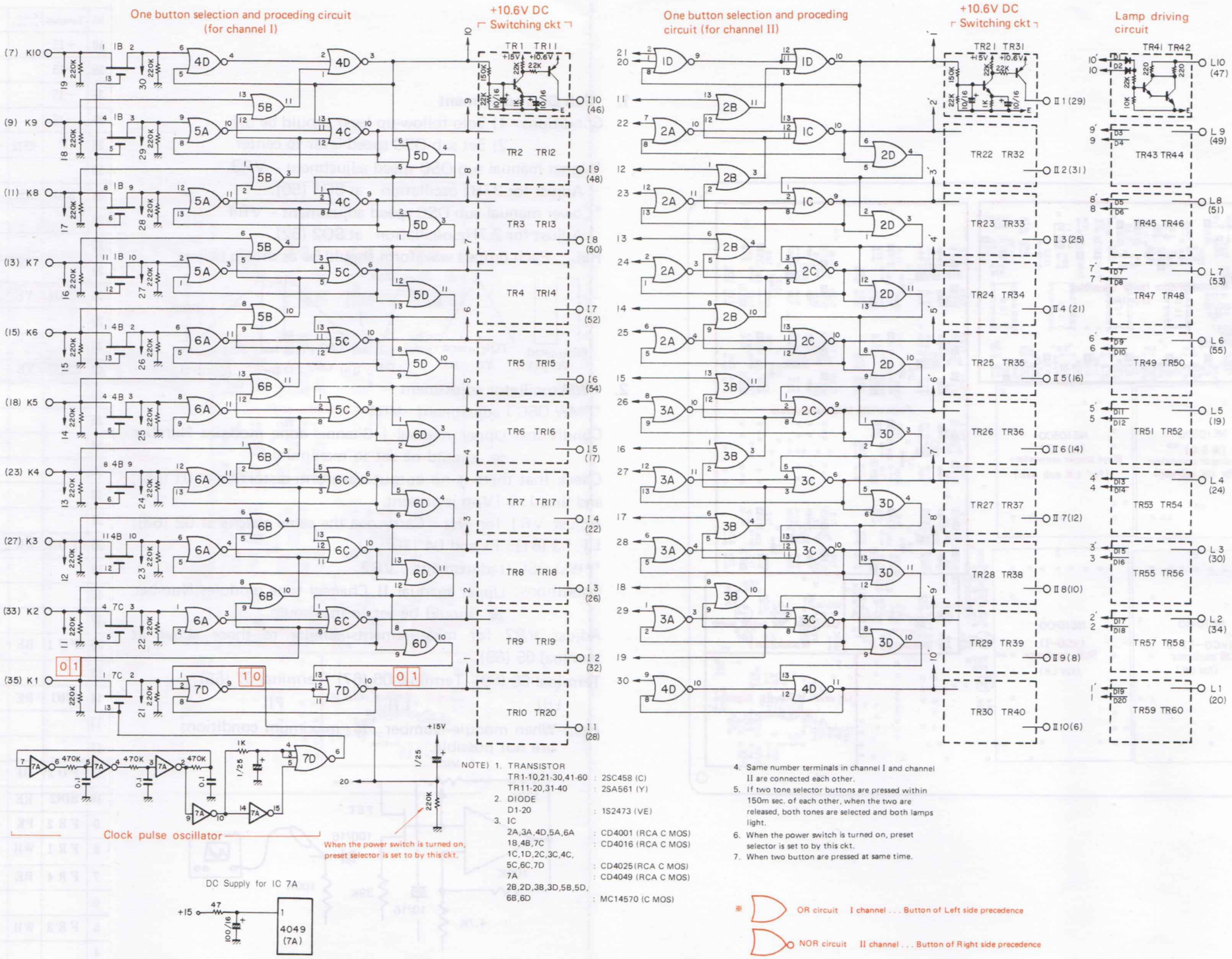

NOTE) 1. TRANSISTOR

TR1-10,21-30,41-60	: 2SC458 (C)
TR11-20,31-40	: 2SA561 (Y)

2. DIODE

D1-20	: 1S2473 (VE)

3. IC

2A,3A,4D,5A,6A	: CD4001 (RCA C MOS)
1B,4B,7C	: CD4016 (RCA C MOS)
1C,1D,2C,3C,4C, 5C,6C,7D	: CD4025 (RCA C MOS)
7A	: CD4049 (RCA C MOS)
2B,2D,3B,3D,5B,5D, 6B,6D	: MC14570 (C MOS)

4. Same number terminals in channel I and channel II are connected each other.
5. If two tone selector buttons are pressed within 150m sec. of each other, when the two are released, both tones are selected and both lamps light.
6. When the power switch is turned on, preset selector is set to by this ckt.
7. When two button are pressed at same time.

* OR circuit I channel . . . Button of Left side precedence

NOR circuit II channel . . . Button of Right side precedence

PSM Circuit Board, Wiring

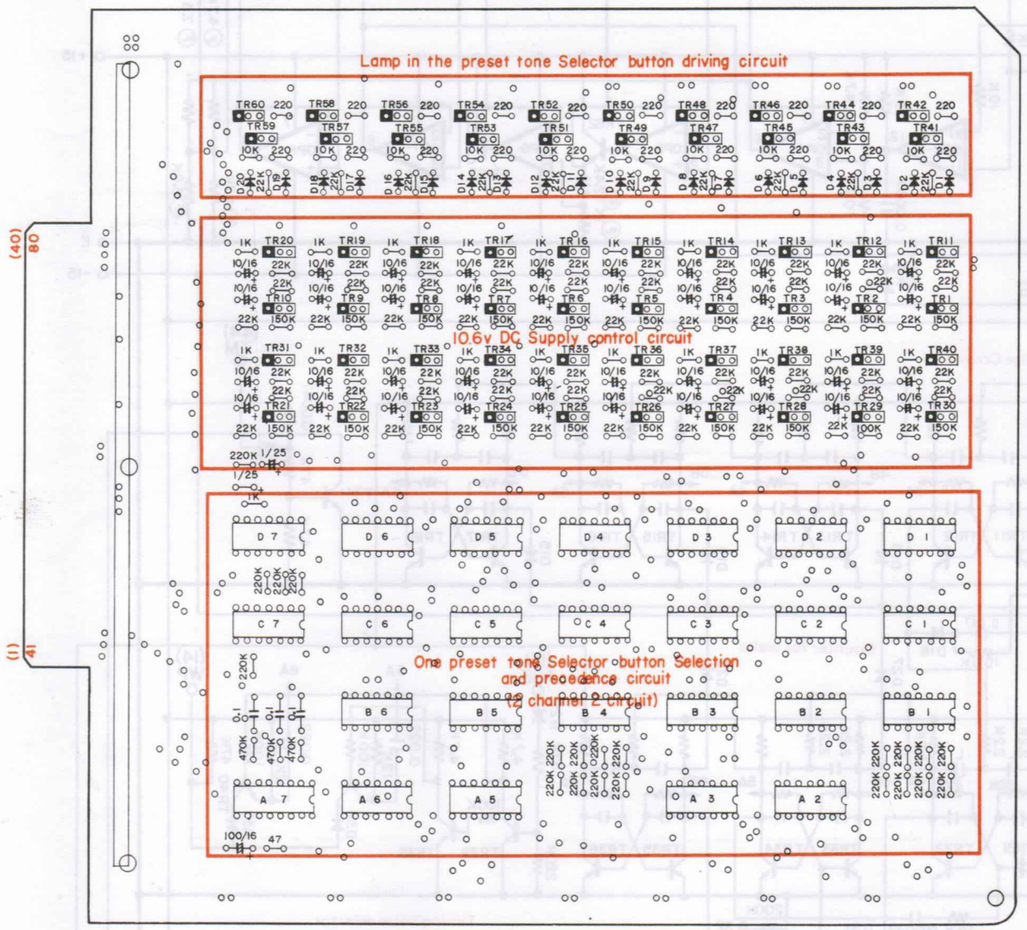

Wirings

PSM1								PSM2								PSM3							
No.	Terminal	Color of Wire	Direction	No.	Terminal	Color of Wire	Direction	No.	Terminal	Color of Wire	Direction	No.	Terminal	Color of Wire	Direction	No.	Terminal	Color of Wire	Direction	No.	Terminal	Color of Wire	Direction
40	+15			80	+15			40	+15			80	+15			40	+15			80	+15		
39	+15			79	+15			39	+15			79	+15			39	+15			79	+15		
38	+10.6			78	+10.6			38	+10.6			78	+10.6			38	+10.6			78	+10.6		
37	+10.6			77	+10.6			37	+10.6			77	+10.6			37	+10.6			77	+10.6		
36				76				36				76				36				76			
35	K 1	BR	PNI-⑰-M	75				35	K 1	BR	PNI-㉗-M	75				35	K 1	BR	PNI-㊲-M	75			
34	L 2	OR	PNI-⑱-L	74				34	L 2	OR	PNI-㉘-L	74				34	L 2	OR	PNI-㊳-L	74			
33	K 2	RE	PNI-⑱-M	73				33	K 2	RE	PNI-㉘-M	73				33	K 2	RE	PNI-㊳-M	73			
32	I 2	RF	TBU-C2'(56)	72				32	I 2	RE	TBL-C2'(56)	72				32	I 2	RE	TBP-C2'(56)	72			
31	II 2	OR	TBU-C2(76)	71				31	II 2	OR	TBL-C2(76)	71				31	II 2	OR	TBP-C2(76)	71			
30	L 3	YE	PNI-⑲-L	70				30	L 3	YE	PNI-㉙-L	70				30	L 3	YE	PNI-㊴-L	70			
29	II 1	G,	TBU-C1'(16)	69				29	II 1	GR	TBL-C1'(16)	69				29	II 1	GR	TBP-C1'(16)	69			
28	I 1	BR	TBU-C1(36)	68				28	I 1	BR	TBL-C1(36)	68				28	I 1	BR	TBP-C1(36)	68			
27	K 3	OR	PNI-⑲-M	67				27	K 3	OR	PNI-㉙-M	67				27	K 3	OR	PNI-㊴-M	67			
26	I 3	OR	TBU-C3(37)	66				26	I 3	OR	TBL-C3(37)	66				26	I 3	OR	TBP-C3(37)	66			
25	II 3	YE	TBU-C3'(17)	65				25	II 3	YE	TBL-C3'(17)	65				25	II 3	YE	TBP-C3'(17)	65			
24	L 4	GR	PNI-⑳-L	64				24	L 4	GR	PNI-㉚-L	64				24	L 4	GR	PNI-㊵-L	64			
23	K 4	YE	PNI-⑳-M	63				23	K 4	YE	PNI-㉚-M	63				23	K 4	YE	PNI-㊵-M	63			
22	I 4	BE	TBU-C4(77)	62				22	I 4	BE	TBL-C4(77)	62				22	I 4	BE	TBP-C4(77)	62			
21	II 4	BR	TBU-C4'(57)	61				21	II 4	GR	TBL-C4'(57)	61				21	II 4	GR	TBP-C4'(57)	61			
20	L 1	RE	PNI-⑰-L	60				20	L 1	RE	PNI-㉗-L	60				20	L 1	YE	PNI-㊲-L	60			
19	I 5	BE	PNI-㉑-L	59				19	L 5	BE	PNI-㉛-L	59				19	L 5	BE	PNI-㊶-L	59			
18	K 5	BR	PNI-㉑-M	58				18	K 5	GR	PNI-㉛-M	58				18	K 5	GR	PNI-㊶-M	58			
17	I 5	BR	TBU-C5(38)	57				17	I 5	GR	TBL-C5(38)	57				17	I 5	GR	TBP-C5(38)	57			
16	II 5	YE	TBU-C5'(18)	56				16	II 5	YE	TBL-C5'(18)	56				16	II 5	YE	TBP-C5'(18)	56			
15	K 6	BE	PNI-㉒-M	55	L 6	VI	PNI-㉒-L	15	K 6	BE	PNI-㉜-M	55	L 6	VI	PNI-㉜-L	15	K 6	BE	PNI-㊷-M	55	L 6	VI	PNI-㊷-L
14	II 6	WH	TBU-C6'(58)	54	I 6	BE	TBU-C6(78)	14	II 6	WH	TBL-C6'(58)	54	I 6	BE	TBL-C6(78)	14	II 6	WH	TBP-C6'(58)	54	I 6	BE	TBP-C6(78)
13	K 7	VI	PNI-㉓-M	53	L 7	GY	PNI-㉓-L	13	K 7	VI	PNI-㉝-M	53	L 7	GY	PNI-㉝-L	13	K 7	VI	PNI-㊸-M	53	L 7	GY	PNI-㊸-L
12	II 7	GY	TBU-C7'(19)	52	I 7	VI	TBU-C7(39)	12	II 7	GY	TBL-C7'(19)	52	I 7	VI	TBL-C7(39)	12	II 7	GY	TBP-C7'(19)	52	I 7	VI	TBP-C7(39)
11	K 8	GY	PNI-㉔-M	51	L 8	WH	PNI-㉔-L	11	K 8	GY	PNI-㉞-M	51	L 8	WH	PNI-㉞-L	11	K 8	GY	PNI-㊹-M	51	L 8	WH	PNI-㊹-L
10	II 8	VI	TBU-C8'(59)	50	I 8	GY	TBU-C8(79)	10	II 8	VI	TBL-C8'(59)	50	I 8	GY	TBL-C8(79)	10	II 8	VI	TBP-C8'(59)	50	I 8	GY	TBP-C8(79)
9	K 9	WH	PNI-㉕-M	49	L 9	GG	PNI-㉕-L	9	K 9	WH	PNI-㉟-M	49	L 9	GG	PNI-㉟-L	9	K 9	WH	PNI-㊺-M	49	L 9	GG	PNI-㊺-L
8	II 9	PK	TBU-C9'(59)	48	I 9	WH	TBU-C9(40)	8	II 9	PK	TBL-C9'(20)	48	I 9	WH	TBL-C9(40)	8	II 9	PK	TBP-C9'(20)	48	I 9	WH	TBP-C9(40)
7	K10	GG	PNI-㉖-M	47	L10	SB	PNI-㉖-L	7	K10	GG	PNI-㊱-M	47	L10	SB	PNI-㊱-L	7	K10	GG	PNI-㊻-M	47	L10	SB	PNI-㊻-L
6	II10	SB	TBU-C10'(60)	46	I 10	GG	TBU-C10(80)	6	II10	SB	TBL-C10'(60)	46	I 10	GG	TBL-C10(80)	6	II10	SB	TBP-C10(60)	46	I 10	GG	TBP-C10(80)
5				45				5				45				5				45			
4				44				4				44				4				44			
3	E			43	E			3	E	E		43	E			3	E			43	E		
2	E			42	E			2	E	E		42	E			2	E			42	E		
1	E			41	E			1	E	E		41	E			1	E			41	E		

RHY 1 (Rhythm) Circuit Diagram

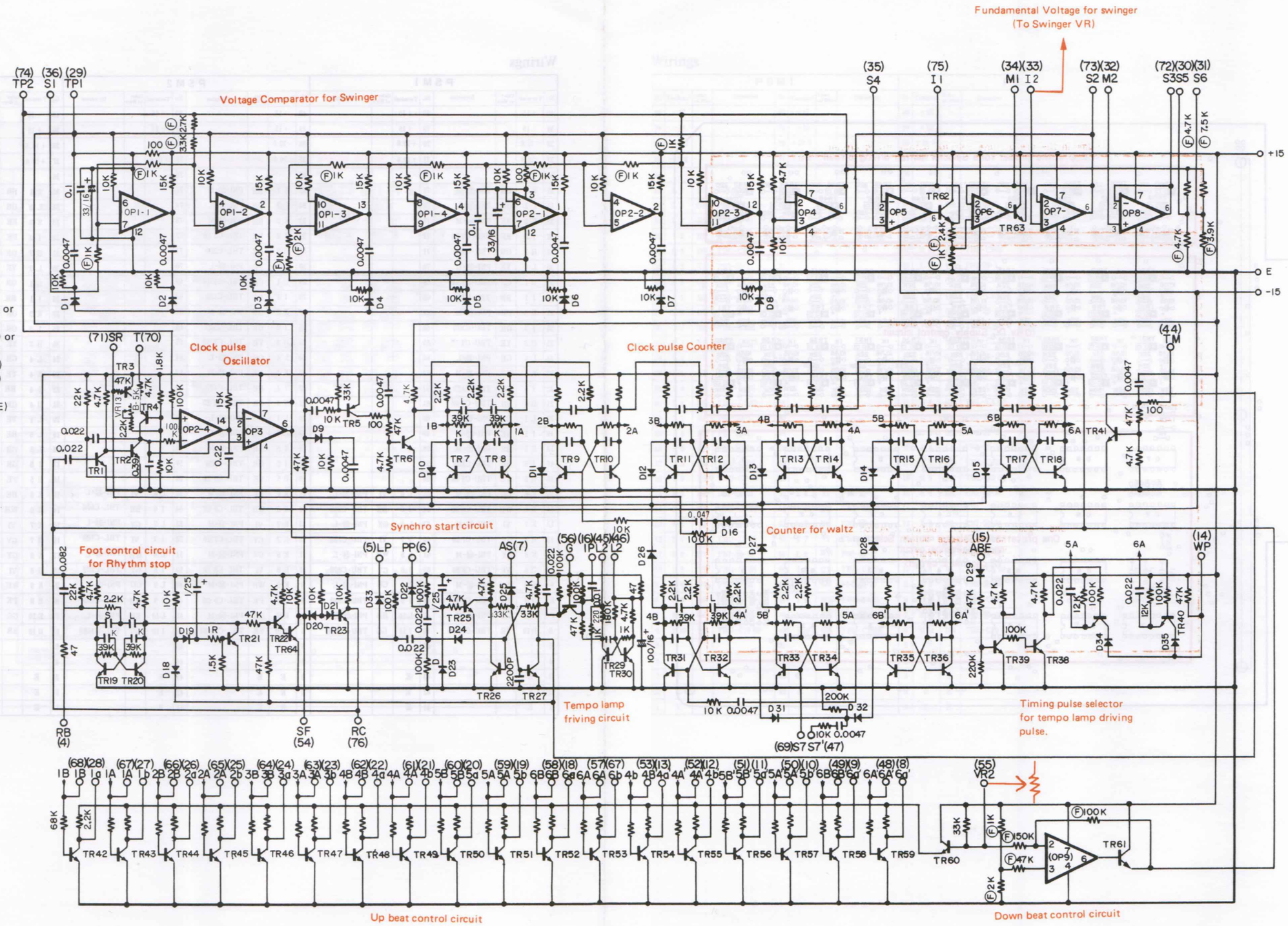

(Note)

1. Transistor
   Tr2,6,21-30,37, 59,62,63 : 2SC458 (B) or 2SC458 (C)
   Tr7-20,31-36 : 2SC458 (A) or 2SC458 (B)
   Tr4,5,3 : 2SA561 (Y)
   Tr60,61,64 : 2SC509 (Y)
2. Diode
   D1-16,16-35 : 1S2473 (VE)
3. IC
   OP1,2 : MC3302P
   OP3,9,8 : TA7504M
4. Tuntalum Capacitor
5. ⊕ △ + Marked
5. Resistor
   F Marked Metal Film Resistor ± 2%
6. Ceramic Capacitor
   K : 1000P (K)
   S : 1000P (S)
   L : 1000P (L)

+15	39, 40, 79, 80
E	1, 2, 3 41, 42, 43
−15	57, 38 79, 78

KEC-3260-43

RHY 1 Circuit Board, Adjustment, Wiring

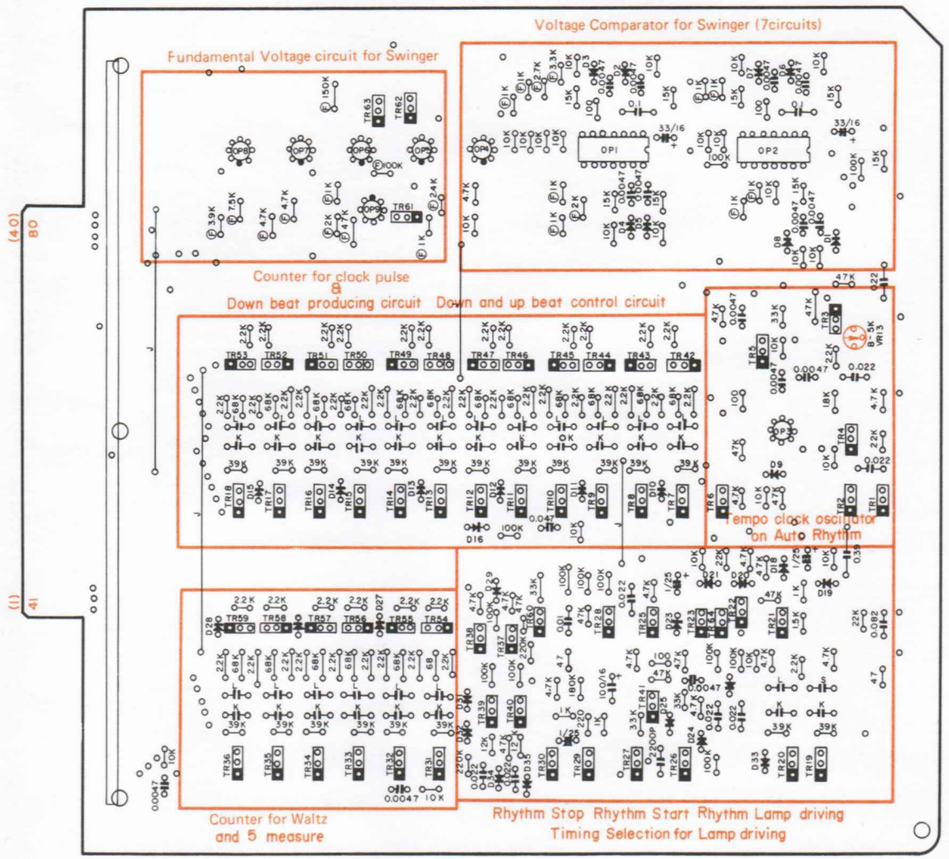

1. **Slow Rock tempo compensation adjustment --VR13**
   Conditions: Set tempo VR to maximum speed.
   The speed of the rhythm tempo oscillator should be approx. 10Hz for all beats except Slow Rock.
   Adjust the Slow Rock tempo for a 7.5Hz frequency at terminal TP1 (29).

Wirings

RHY 1							
No.	Terminal	Color of wire	Direction	No.	Terminal	Color of wire	Direction
40	+15	RE12	PN6-TVR1-1	80	+15		
39	+15			79	+15		
38	−15	GY12	RA--15	78	−15		
37	−15			77	−15		
36	S 1	BR	PS1-⑥-C	76	R C	GG	PN6-SW1-M
35	S 4	YE	PS1-⑤-C	75	I 1	YE	PN6-VR1-2-3
34	M 1	BE	PN6-VR1-3-3	74	TP2		
33	I 2	GR	PN6-VR1-3-2	73	S 2	RE	PS1-⑥-B
32	M 2	VI	PN6-VR1-3-2	72	S 3	OR	PS1-⑥-M
31	S 6	BE	PS1-⑤-M	71	S R	YE	PS5-⑥-C
30	S 5	GR	PS1-⑤-B	70	T	OR	PN6-VR1-1-1
29	TP1			69	S 7	YE	PS15-⑥-C
28	1 a			68	1 B		
27	1 b			67	1 A		
26	2 a			66	2 B		
25	2 b			65	2 A		
24	3 a			64	3 B		
23	3 b			63	3 A		
22	4 a			62	4 B		
21	4 b			61	4 A	WH	PS1-①-M
20	5 a			60	5 B		
19	5 b			59	5 A	GG	PS1-①-B
18	6 a			58	6 B		
17	6 b			57	6 A		
16	1 P	RE	PS3-④-C	56	G	GY	PN6-SW1-C
15	ABE			55	VR2	BR×2	PN6-TVR1-2 RHY4-1M(32)
14	WP	OR	PS3-④-M	54	S F		
13	4 a'			53	4B'	GY	RHY3-4B'(27)
12	4 b'			52	4A'	VI	RHY3-4A'(67)
11	5 a'			51	5B'		
10	5 b'			50	5A'	WH	RHY3-5A'(28)
9	6 a'			49	6B'		
8	6 b'			48	6A'	SB×2	PS16-③-B RHY3-6A'(70)
7	A S	WH	PN6-SW1-B	47	S1'	GR	PS16-④-M
6	P P			46	L 2	BR	PN6-L2
5	L P	WH	KAL-CN2-LP(49)	45	L 1	PK	PN6-L1
4	R B	OR	PN7-⑨-M	44	T M	SB	PN6-SW2-M
3	E			43	E		
2	E	BL12	PN6-TVR1-④	42	E		
1	E			41	E		

RHY 2 (Up beat matrix for rhythm) Circuit Diagram

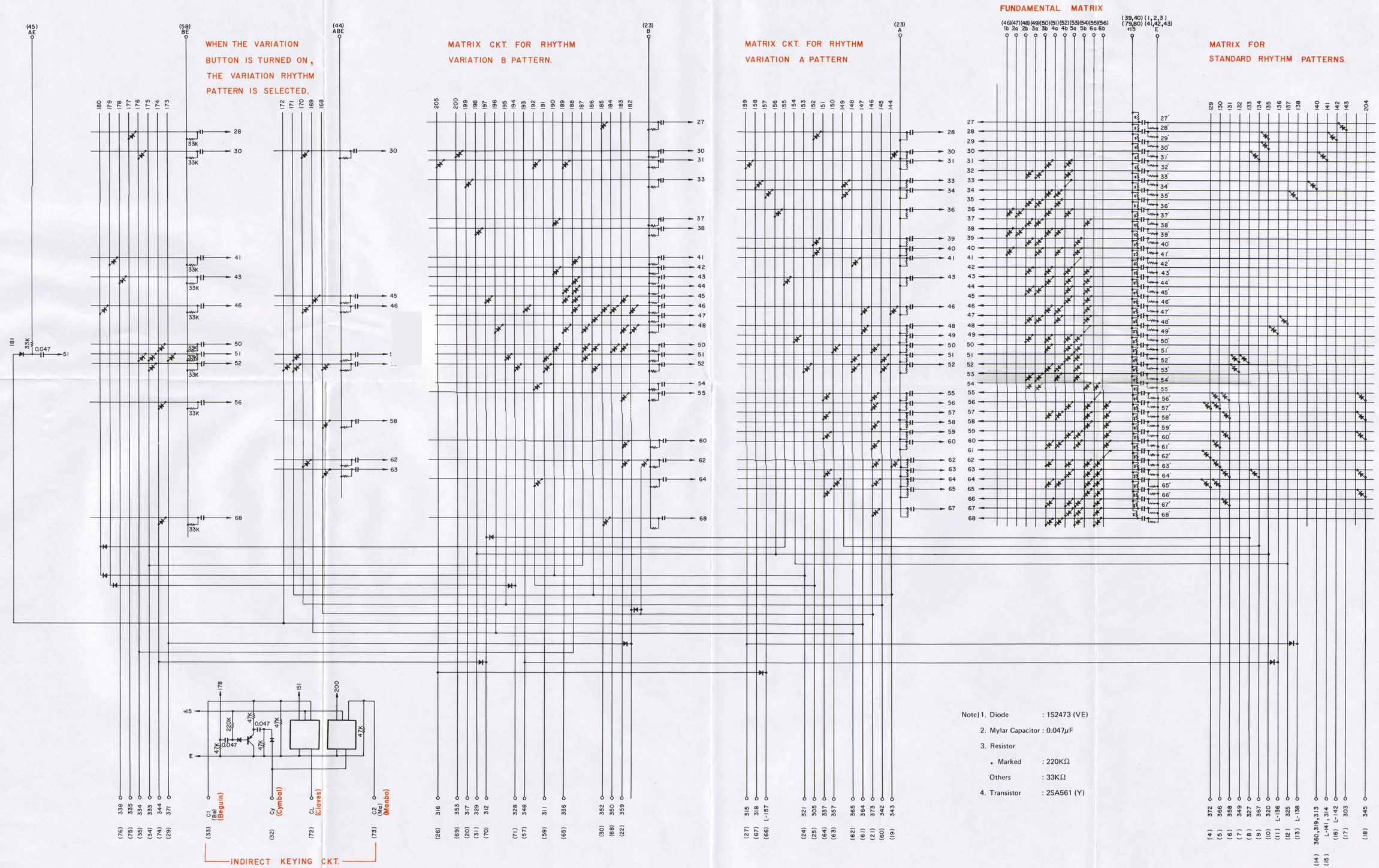

Note) 1. Diode : 1S2473 (VE)
2. Mylar Capacitor : 0.047μF
3. Resistor
• Marked : 220KΩ
Others : 33KΩ
4. Transistor : 2SA561 (Y)

RHY 2 Circuit Board, Wiring

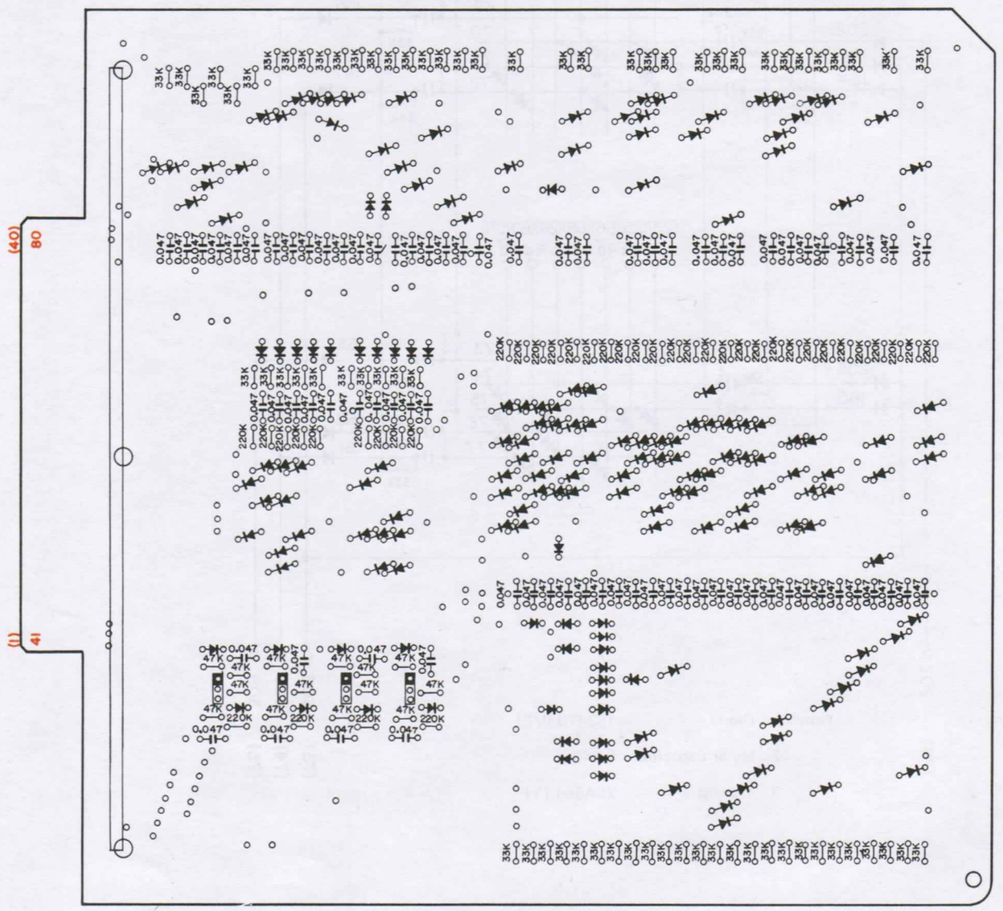

RHY 2							
No.	Terminal	Color of Wire	Direction	No.	Terminal	Color of Wire	Direction
40	+15			80	+15		
39	+15			79	+15		
38				78			
37				77			
36				76	338		
35	334	BE	PS9-①-M	75	335	VI	PS9-⑥-M
34	333	GR	PS9-②-M	74	344	RE	PS10-⑥-M
33	C I	YE	PS9-④-M	73	C 2	WH	PS11-④-M
32	C Y			72	C L		
31	329	BE	PS8-①-M	71	328	BR	PS8-②-M
30	352	GY	PS11-⑤-M	70	312	BE	PS8-③-M
29	371	RE	PS14-②-M	69	353		
28	A	BR	PS15-⑤-C	69	350	BE	PS11-③-M
27	315	WH	PS4-⑥-M	67	318	PK	PS5-③-M
26	316	GG	PHY-316 (59)	66	L 157	OR	RHY3-157(52)
25	305	GG2	PS2-②-M PHY3-305(62)	65	336	GY	PS9-⑤-M
24	321	YE2	PS6-④-M RHY3-321(49)	64	337		
23	B	BE	PS16-⑤-C	63	357	RE	PS12-②-M
22	359	GY	PS12-③-M	62	365	GY	PS13-①-M
21	373	YE	PS14-⑥-M	61	364	GG	PS13-②-M
20	317	SB	PS5-②-M	60	342	PK	PS10-②-M
19	343	BR	PS10-①-M	59	311	GR	PS4-②-M
18	345	OR	PS10-⑤-M	58	B E	VI	PS16-⑥-C
17	303	WH	PS2-③-M	57	348	YE2	PS11-③-M RHY3-348(7)
16	L 142			56	6 b		
15	L141.314	GY	PS4-⑤-M	55	6 a		
14	313 . 319 36 0	VI2	PS12-④-M VI X 2 PS4-①-M	54	5 b		
13	L 138			53	5 a		
12	325			52	4 b		
11	L 136			51	4 a		
10	320	BR	PS5-⑤-M	50	3 b		
9	367	SB	PS13-⑤-M	49	3 a		
8	327	PK	PS8-③-M	48	2 b		
7	349	GR	PS11-②-M	47	2 a		
6	358	OR	PS12-⑤-M	46	1 b		
5	366	PK	PS13-⑥-M	45	A E	OR	PS15-④-C
4	372	OR	PS13-①-M	44	A B E	GG	PS16-①-C
3	E			43	E		
2	E			42	E		
1	E			41	E		

RHY 3 (Down beat matrix for Rhythm)

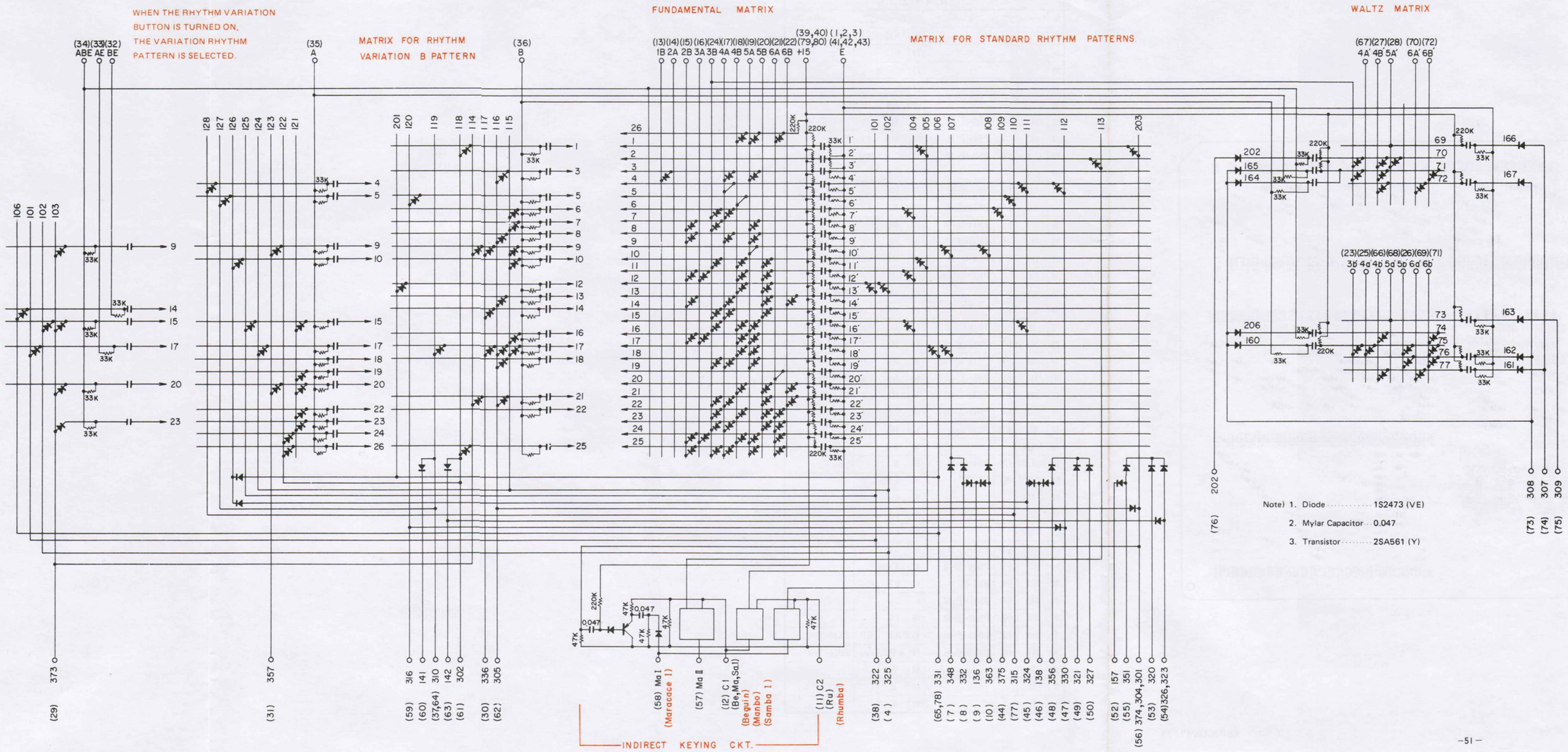

KEC-3262-43

RHY 3 Circuit Board, Wiring

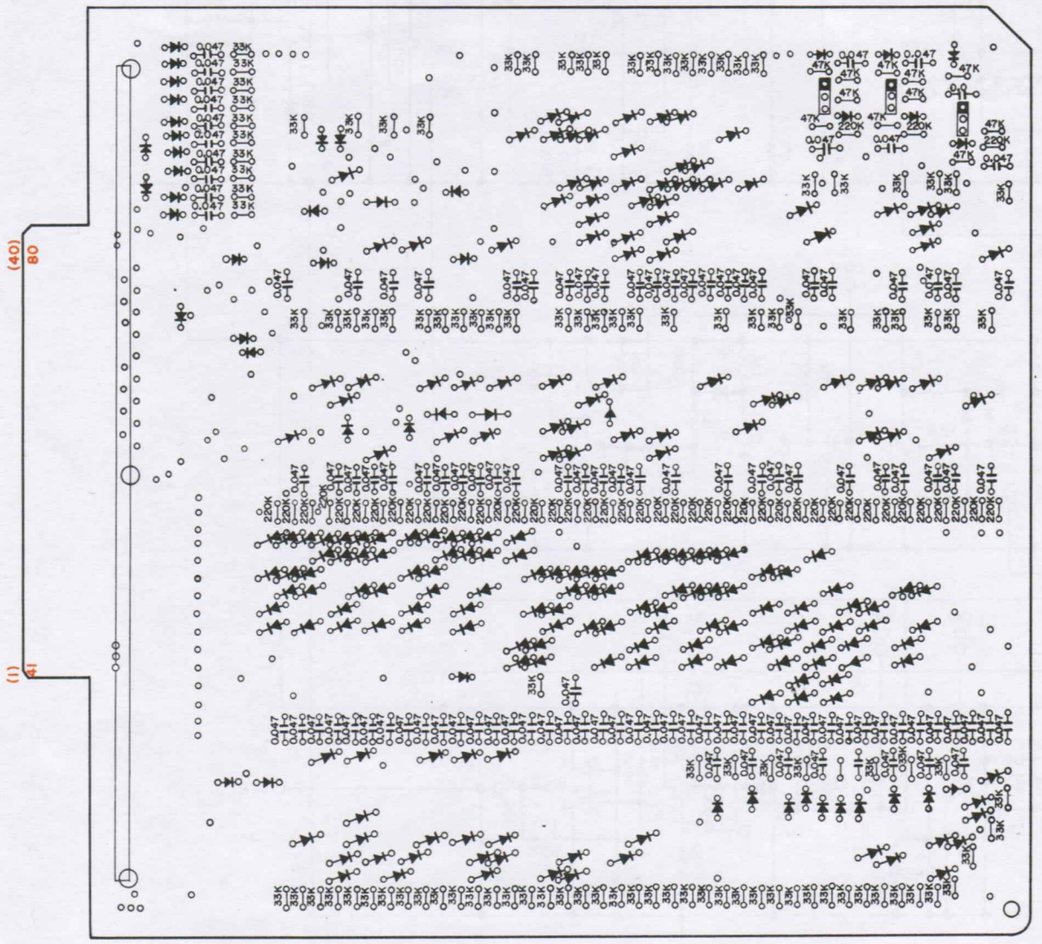

RHY 3							
No.	Terminal	Color of wire	Direction	No.	Terminal	Color of wire	Direction
40	+15			80	+15		
39	+15			79	+15		
38	322	GR	PS6-②-M	78	331	OR	PS8-⑤-M
37	310			77	315		
36	B			76	202	GY	PS15-②-C
35	A			75	309	BR	PS3-③-M
34	ABE			74	307	SB	PS3-①-M
33	AE			73	308	PK	PS3-②-M
32	BE			72	6B'		
31	373			71	6b'		
30	5A'			70	6A'	SB	RHY1-6A'(48)
29	4B'			69	6a'		
28	5b'	WH	RHY1-5A'(50)	68	5a'		
27	4a'	GY	RHY1-4B'(53)	67	4A'	VI	RHY1-4A'(52)
26	3B			66	4b'		
25	3b'			65	331		
24	6B			64	310	YE	PS4-④-M
23	6A			63	142		
22	5B			62	305	GG	RHY2-305(25)
21	5A			61	302	GY	PS5-②-M
20	4B			60	141		
19	4A			59	316	GG2	PS1-④-M RHY2-316(26)
18	3A			58	Ma I		
17	2B			57	Ma II		
16	2A			56	301.304 374	SB2	PS1-④-M PS14-⑤-M
15	1B			55	351	VI	PS11-⑥-M
14	C1			54	323.325	BE	PS6-③-M
13	C1			53	320		
12	C2	WH	PS13-④-M	52	157	OR	RHY2-L157(66)
11	C2	GG	PS10-④-M	51			
10	363	BR	PS14-③-M	50	327		
9	136			49	321	YE	PHY2-321(24)
8	332	SB	PS10-③-M	48	356	BR	PS12-①-M
7	348	YE	RHY2-348(57)	47	330	RE	PS8-⑥-M
6				46	138		
5				45	324	SB	PS7-④-M
4	325	GY	PS7-②-M	44	375	BE	PS14-④-M
3	E			43	E		
2	E			42	E		
1	E			41	E		

RHY 4 (Rhythm Sound Source oscillator) Circuit Diagram

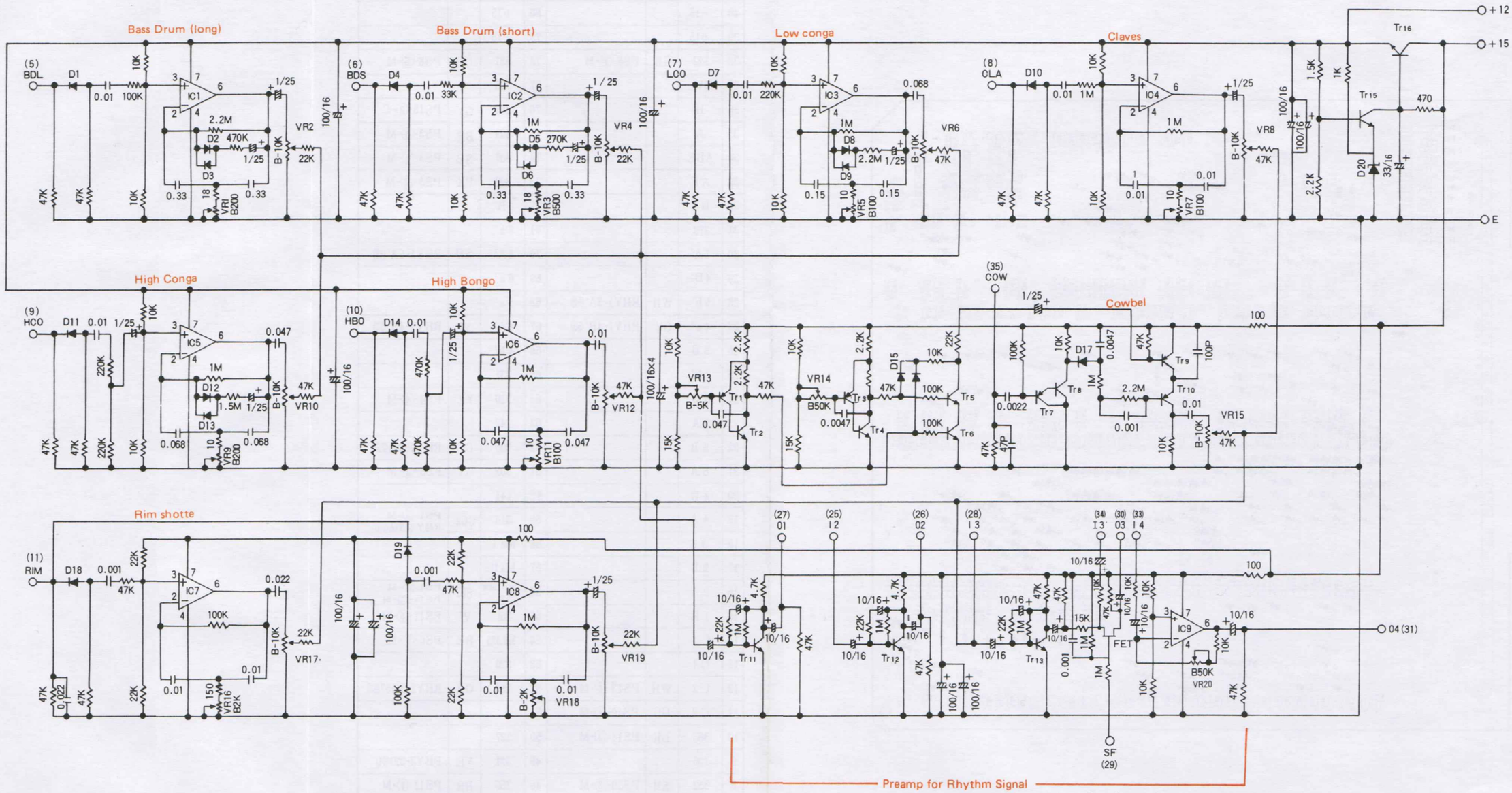

Note) 1. Transistor

Tr2, Tr4 Tr6, Tr11 ~ 13, Tr15	:	2SC458L (C)
Tr1, Tr3, Tr7 ~ Tr10	:	2SA561 (Y)
Tr16	:	2SC509 (Y)
FET	:	2SK30A (Y)

2. Diode
   - D : 1S2473 (VE)
   - ZD : 1S1715
3. IC : TA7504M
4. VR : 3321H

RHY 4 Circuit Board, Adjustment, Wiring

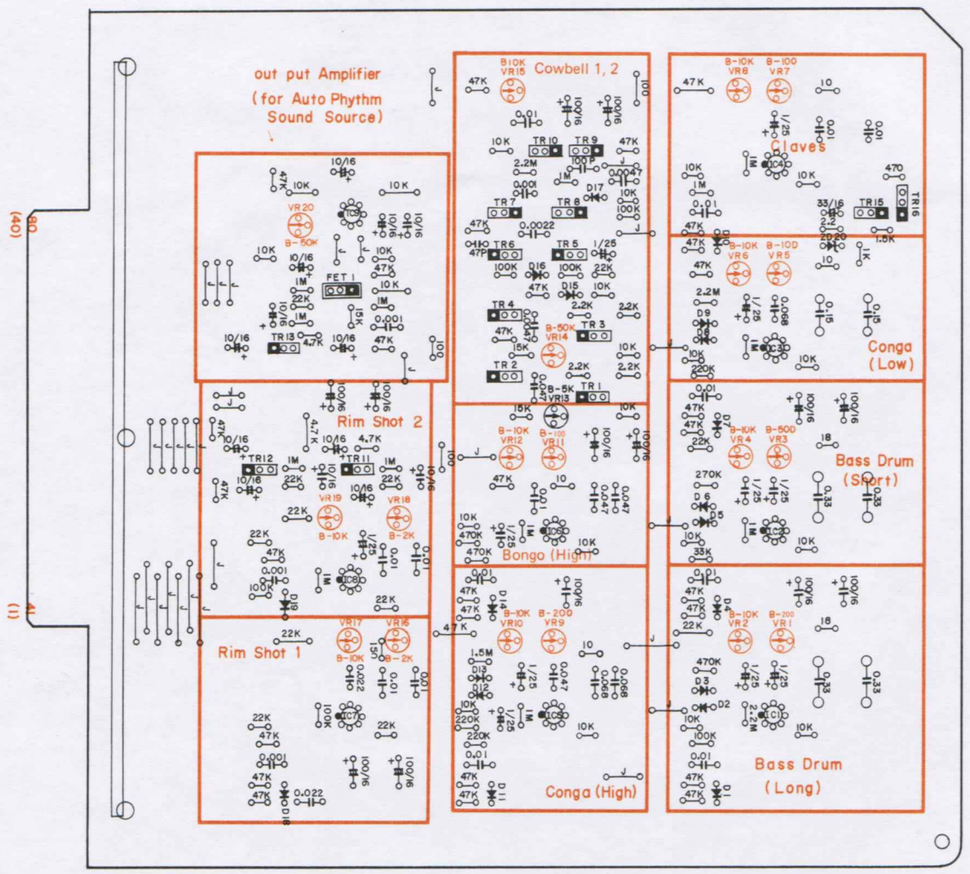

1. Rhythm Sound source color adjustment.

Tone Source	out put terminal	Decay time and VR No.		Attack Level and VR No.	
Bass dram (Long)	O1 (27)	400mS	VR1	3.0Vpp	VR2
" (Short)	"	300mS	VR3	3.5Vpp	VR4
Low conga	"	80mS	VR5	3.0Vpp	VR6
High conga	"	55mS	VR9	2.0Vpp	VR10
High bongo	"	70mS	VR11	1.0Vpp	VR12
Claves	I3 (28)	22mS	VR7	0.02 Vpp	VR8
Cowbell 1	"	60mS	VR13	0.005Vpp	VR15
Cowbell 2	"		VR14		
Rim shot	"	15mS	VR16	0.06 Vpp	VR17
Rim shot	"		VR18	0.02Vpp	VR19

Conditions: Set the decay time as shown by the following diagram.

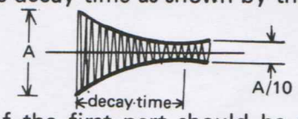

Ref.: The value of the first part should be that when the input pulse is 6V, so that when the image control is set at center the value is approx. 2/3.

2. Rhythm amp output level adjustment -- VR20

Conditions: (1) Set for Jazz Rock I.
(2) Set for fastest rhythm speed.
(3) Set the image control to center.

Adjust VR20 so that -15dBm (122mV) is present at the 5 Ch out terminal or terminal 04 (31).

R H Y 4

No.	Terminal	Color of wire	Direction	No.	Terminal	Color of wire	Direction
40	+15			80			
39	+15			79			
38				78			
37				77			
36				76			
35	COW	GY2	PS5-③-C PN2-①-8	75			
34	I 3'	S·GR·S	PN6-VR2-2-2	74			
33	I 4	S·RES	PN6-VR2-1-2	73			
32	I M	BR	RHY1-VR2(55)	72			
31	O 4			71			
30	O 3	S·BR	PN6-VR2-1-3	70			
29	S F			69			
28	I 3			68			
27	O 1	S·YE	PN6-VR2-2-1	67			
26	O 2	S·OR	PN6-VR2-2-3	66			
25	I 2			65			
24				64			
23				63			
22				62			
21				61			
20				50			
19				59			
18				58			
17				57			
16				56			
15				55			
14				54			
13				53			
12				52			
11	RIM	GR2	PS12-⑤-C PN2-①-6	51			
10	BOH	YE2	PS4-③-C PN2-①-4	50			
9	COH	RE2	PS13-①-C PN2-①-3	49			
8	CLA	BE2	PS10-⑤-C PN2-①-5	48			
7	COL	OR2	PS4-②-C PN2-①-2	47			
6	BDS	RE2	PS7-④-C PN2-SH-D_4	46			
5	BDL	GR2	PS3-①-C PN2-SH-D_3	45			
4				44			
3	E			43			
2	E			42			
1	E			41			

RHY 5 (Rhythm Sound Source by Noise System) Circuit Diagram

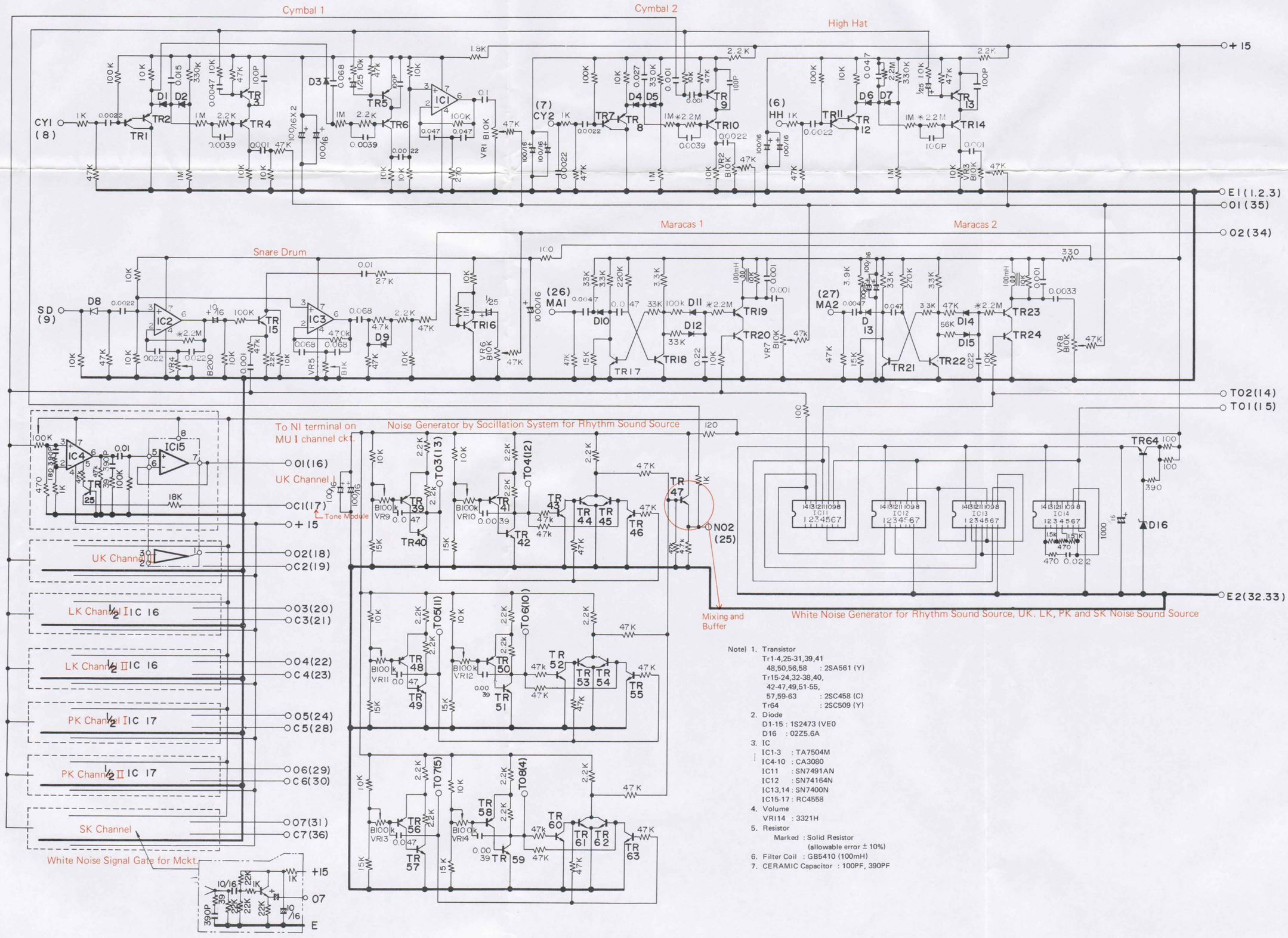

Note) 1. Transistor
Tr1-4,25-31,39,41
48,50,56,58 : 2SA561 (Y)
Tr15-24,32-38,40,
42-47,49,51-55,
57,59-63 : 2SC458 (C)
Tr64 : 2SC509 (Y)

2. Diode
D1-15 : 1S2473 (VE0
D16 : 02Z5.6A

3. IC
IC1-3 : TA7504M
IC4-10 : CA3080
IC11 : SN7491AN
IC12 : SN74164N
IC13,14 : SN7400N
IC15-17 : RC4558

4. Volume
VRI14 : 3321H

5. Resistor
Marked : Solid Resistor
(allowable error ± 10%)

6. Filter Coil : GB5410 (100mH)

7. CERAMIC Capacitor : 100PF, 390PF

RHY 5 Circuit Board, Adjustment, Wiring

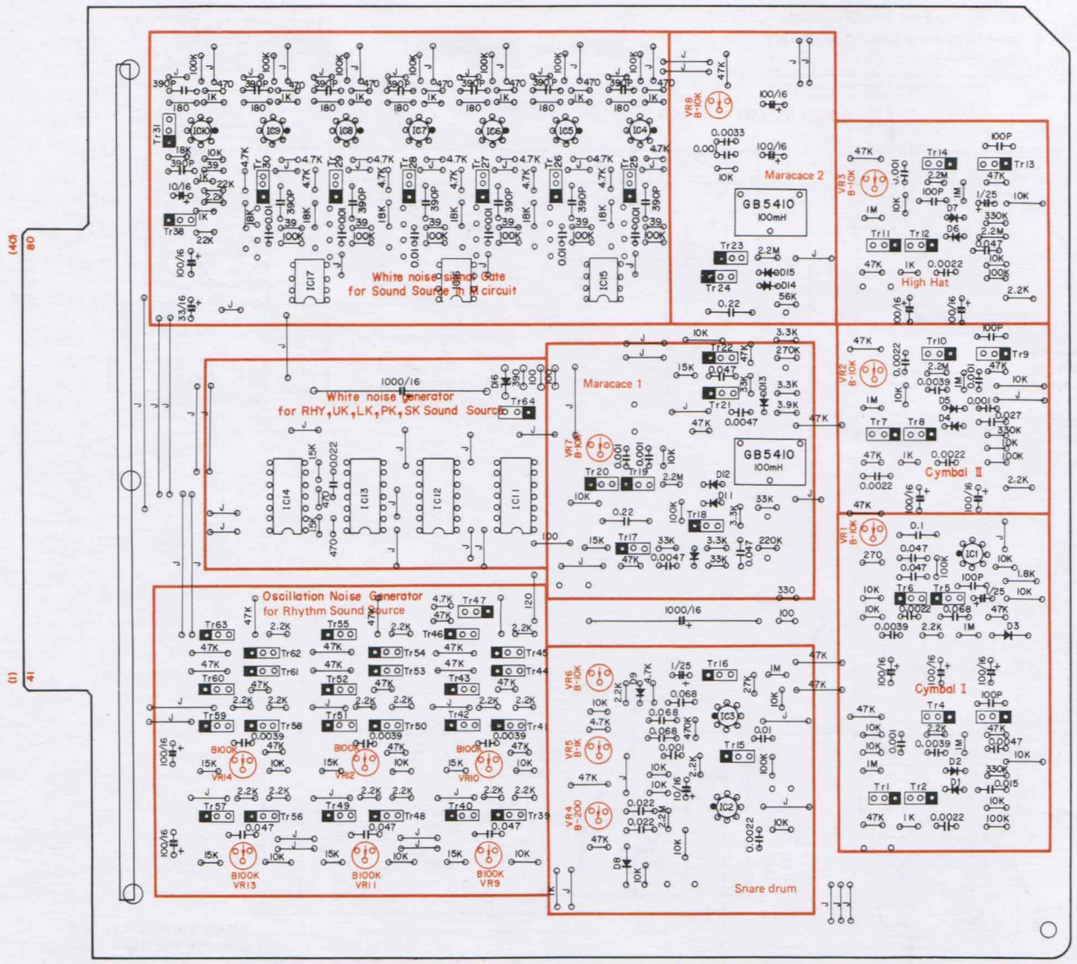

Wiring

RHY 5							
No.	Terminal	Color of wire	Direction	No.	Terminal	Color of wire	Direction
40	+15			80			
39	+15			79			
38	−15	GY12	RA--15	78			
37	−15			77			
36	C 7	BE	TBS-18(27)	76			
35	O 1			75			
34	O 2			74			
33	E_2			73			
32	E_2			72			
31	O 7	S·GR·S	MS-NI(36)	71			
30	C 6	BE	TBP-18'(7)	70			
29	O 6	S·YE S	MP21-NI(36)	69			
28	C 5	V I	TBP-18(27)	68			
27	MA2	OR×2	PS8-⑤-C PN2-SH-D_1	67			
26	MA1	YE×2	PS8-⑥-C PN2-SH-D_2	66			
25	NO2			65			
24	O 5	S·OR·S	MP11-NI(36)	64			
23	C 4	BE	TBL-18'(7)	63			
22	O 4	S·RE·S	ML21-NI(36)	62			
21	C 3	V I	TBL-18(27)	61			
20	O 3	S·BR·S	ML11-NI(36)	60			
19	C 2	BE	TBU-18'(7)	59			
18	O 2	S·RE·S	ML21-NI(36)	58			
17	C 1	V I	TBU-18(27)	57			
16	O 1	S·BR·S	MU11-NI(36)	56			
15	TO1			55			
14	TO2			54			
13	TO3			53			
12	TO4			52			
11	TO5			51			
10	TO6			50			
9	S D	SB×2	PS1-②-C PN2-①-7	49			
8	CY1	GG×2	PS3-③-C PN2-①-11	48			
7	H H	PK×2	PS1-③-C PN2-①-12	47			
6	TO7	WH×2	PS6-③-C PN2-①-10	46			
5	TO7			45			
4	TO8			44			
3	E			43			
2	E			42			
1	E			41			

KS (Key Voltage for Solo) Circuit Diagram

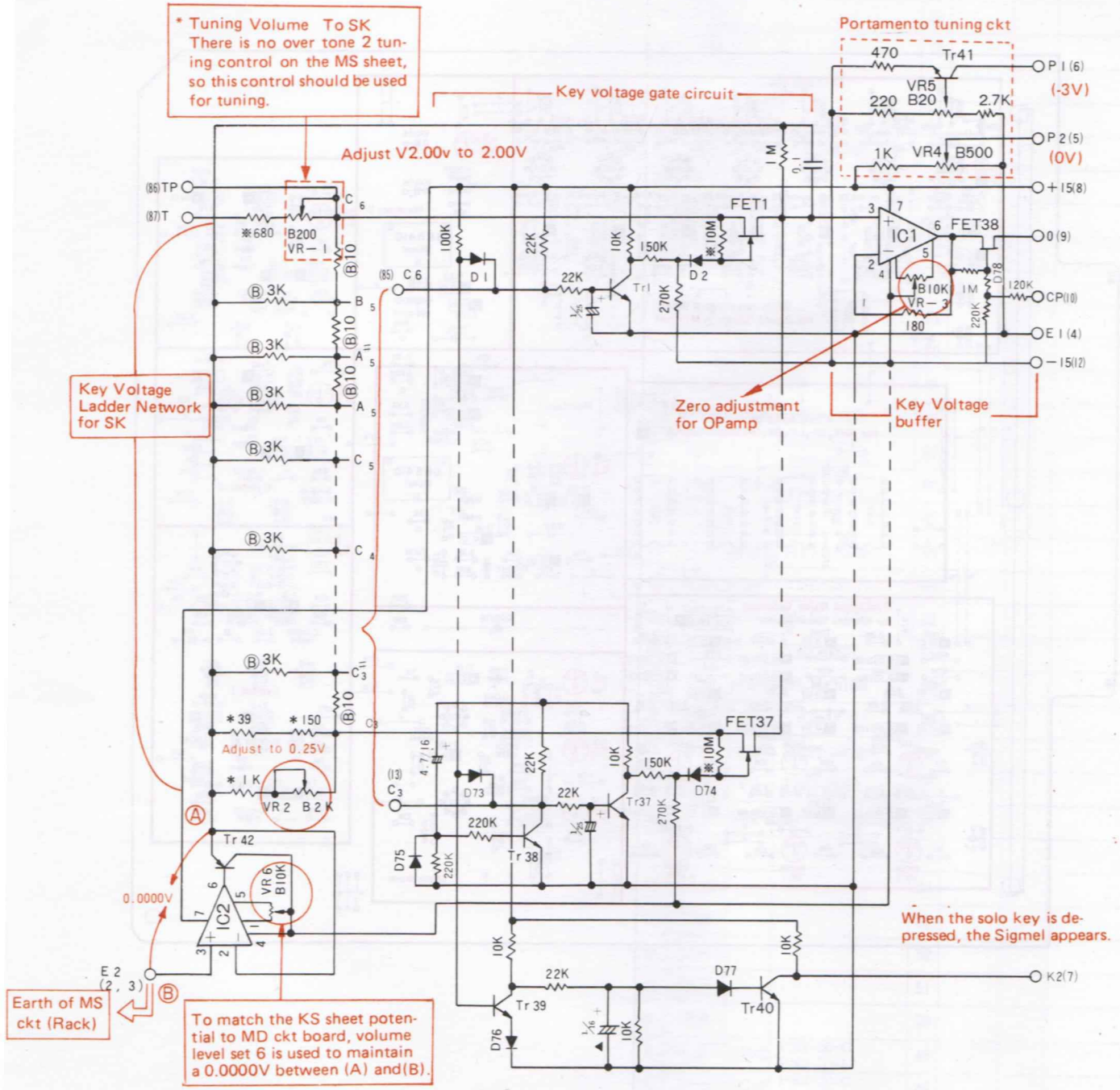

Note) 1. Transistor Tr42 : 2SA561 (Y)
Tr1~40, or : 2SC458 (C)
2. FET FET1~38 : 2SK30A (Y)
3. IC 1, 2 : TA7504M
4. Diode D1~D7B : IS2473 (VE)
5. Volume VR-1~5 : 3321H
6. Resistor Ⓑ marked : Metal Oxide Resistor RP-42 (CB)
* marked : ,, RP-42 (AF)
※ marked : Solid Resistor FRC-14 ±10%

KS Circuit Board, Adjustment and Wiring

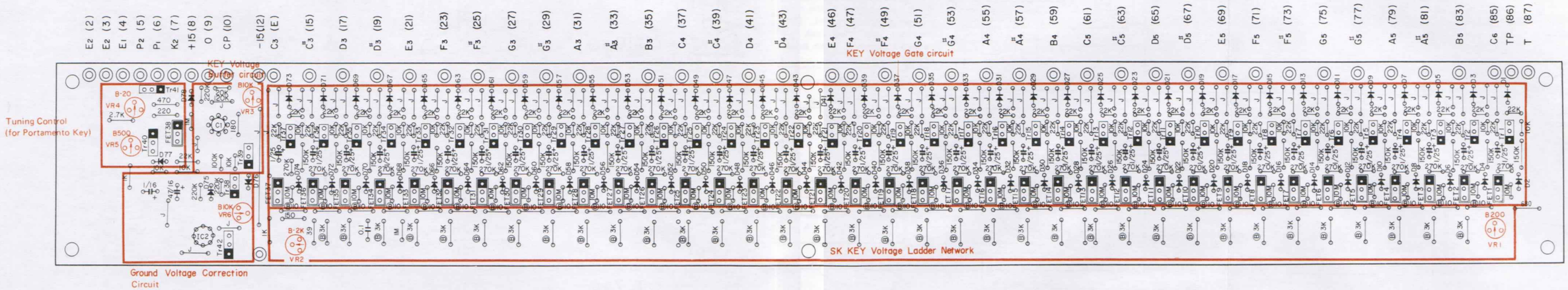

1. Ladder ground potential adjustment -- VR6

Adjust for ±0.1mV between terminal E2 (3) and the ladder network ground point.

2. SK tuning (2.0V) adjustment --VR1

Note: Set the tuning lever at center position.

Adjust for 2.000V at the TP (86) terminal (this may vary slightly due to tuning).

3. SK voltage output amp offset adjustment -- VR3

Conditions:Done while turning on C6 key.

Adjust for 2.000V at the O (9) terminal.

4. 0.25V adjustment --VR2

Conditions: Done while turning on C3 key.

Adjust for 0.25V at the O (9) terminal.

5. Portamento key voltage adjustment.

*C3 key adjustment -- VR4

Carry out tuning comparing with the SK C3 key.

Ref. : Approximately −3.0V should be at the P_1 (6) terminal.

* C6 key adjustment -- VR5

Tune while comparing with SK C6 key.

Ref.: Approximately 0.0V should be at P2 (5) terminal.

Wirings

K S											
No.	Terminal	Color of Wire	Direction	No.	Terminal	Color of wire	Direction		Terminal	Color of Wire	Direction
33	A#3	SB	SK-A#3	73	F#5	VI	SK-F#5				
31	A3	GG	SK-A3	71	F5	BE	SK-F5				
29	G#3	WH	SK-G#3	69	E5	GR	SK-E5				
27	G3	GY	SK-G3	67	D#5	YE	SK-D#5				
25	F#3	VI	SK-F#3	65	D5	OR	SK-D5				
23	F3	BE	SK-F3	63	C#5	RE	SK-C#5				
21	E3	GR	SK-E3	61	C5	BR	SK-C5				
19	D#3	YE	SK-D#3	59	B4	PK	SK-B4				
17	D3	OR	SK-D3	57	A#4	SB	SK-A#4				
15	C#3	RE	SK-C#3	55	A4	GG	SK-A4				
13	C3	BR	SK-C3	53	G#4	WH	SK-G#4				
12	−15	GY 12	SK-L	51	G4	GY	SK-G4				
10 9	CP O	OR RE	SS-CP(14) MS-KB(7)	49	F#4	VI	SK-F#4	87	T	VI	PN 8-①
8	+15	RE 12	SK-TR 3	47	F4	BE	SK-F4	86	TP		
7	K2	BR	SS-KEY(10)	46	E4	GR	SK-E4	85	C6	BR	SK-C6
6	P1	RE 12	POR-1	43	D#4	YE	SK-D#4	83	C5	PK	SK-B5
5	P2	OR	POR-3	41	D4	OR	SK-D4	81	A#5	SB	SK-A#5
4	E1	BL 12×2	SK2-C6-C RA-E	39	C#4	RE	SK-C#4	79	A5	GG	SK-A5
3	E2			37	C4	BR	SK-C4	77	G#5	WH	SK-G#5
2	E2	BL 12	RA-E	35	B3	PK	SK-B3	75	G5	GY	SK-G5

SM (Preset Tone Selection and Memory for Solo Keyboard) Circuit Diagram

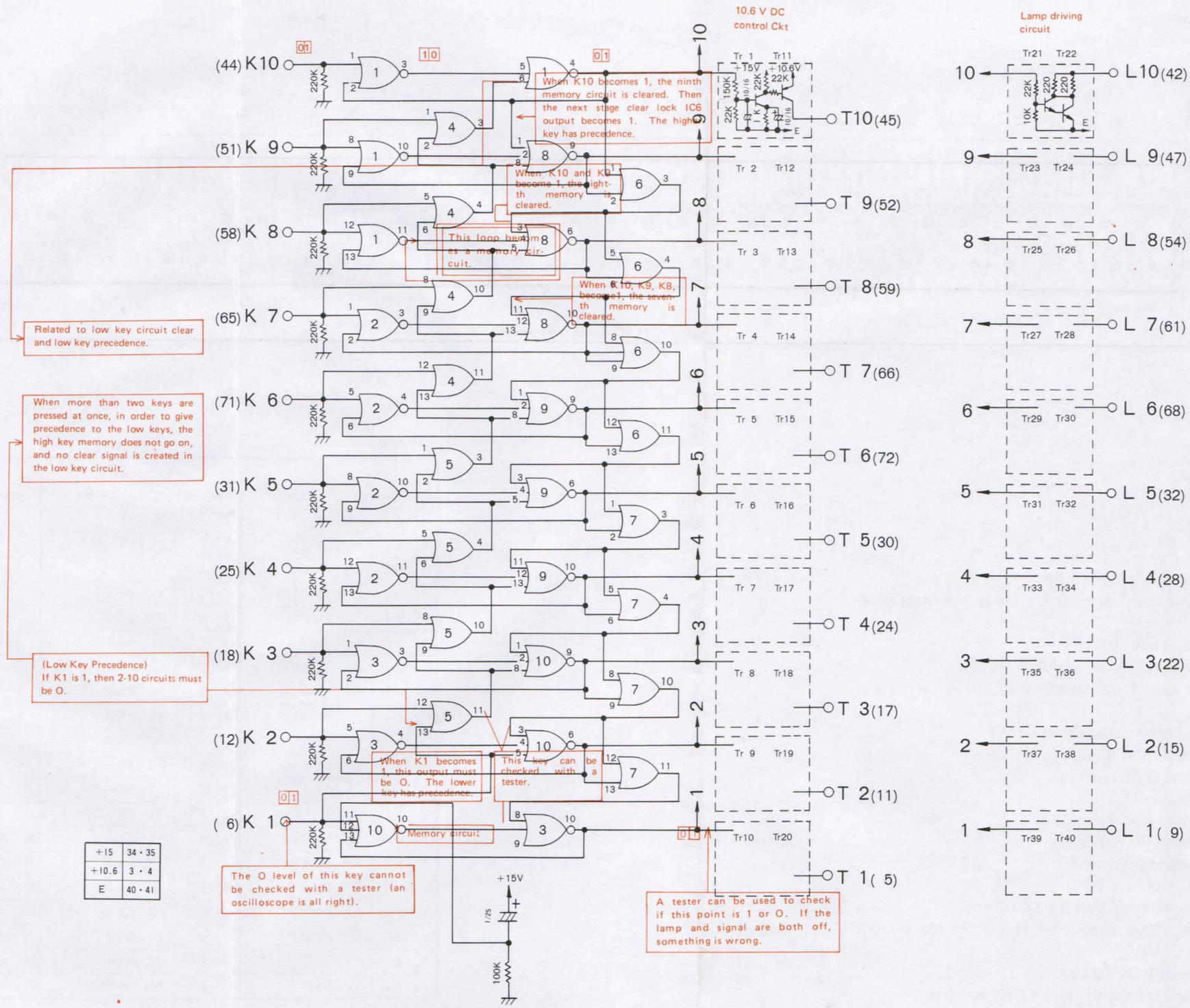

+15	34 · 35
+10.6	3 · 4
E	40 · 41

Notes) 1. Transistor

Tr 1 ~10, 21~40	: 2SC458(C)
Tr11~20	: 2SA561(Y)

2. IC

1, 2, 3	: CD4001 (RCA	CMOS)
8, 9, 10	: CD4025 (RCA	CMOS)
4, 5, 6, 7	: MC14570	(CMOS)

3. Same number is connect.

SM Circuit Board, Wiring

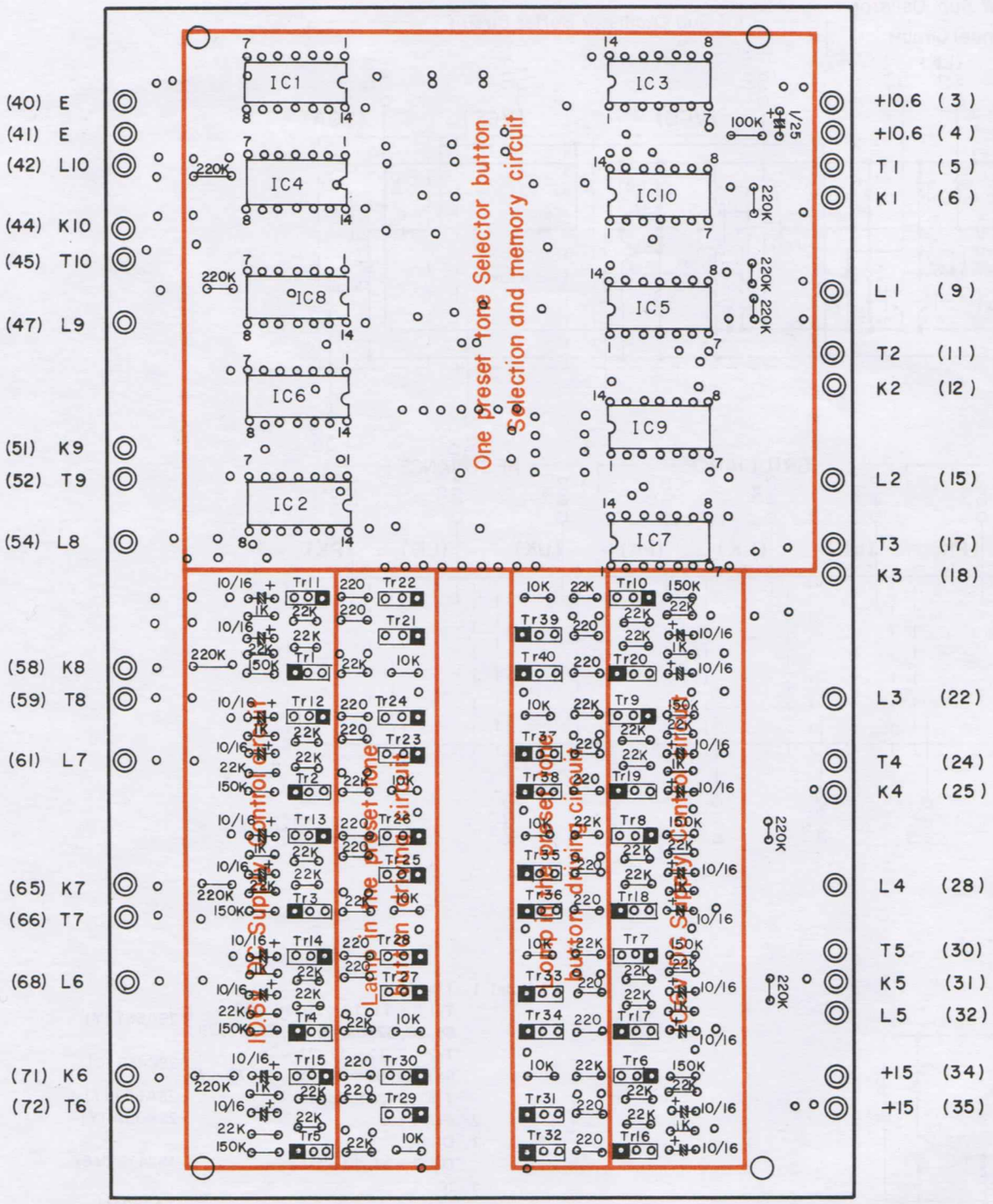

S			M
No.	Terminal	Color of Wire	Direction
72	T 6	GY	TBS-C6(78)
71	K 6	BE	PN1-52-M
68	L 6	PK	PN1-52-L
66	T 7	WH	TBS-C7(39)
65	K 7	VI	PN1-53-M
61	L 7	BR	PN1-53-L
59	T 8	GG	TBS-C8(79)
58	K 8	GY	PN1-54-M
54	L 8	RE	PN1-54-L
52	T 9	SB	TBS-C9(40)
51	K 9	WH	PN1-55-M
47	L 9	OR	PN1-55-L
45	T10	PK	TBS-C10(80)
44	K10	GG	PN1-56-M
42	L10	YE	PN1-56-L
41	E	BL12	RA-E
40	E		
35	+15		
34	+15	RE12	RA-+15
32	L 5	SB	PN1-51-L
31	K 5	GR	PN1-51-M
30	T 5	VI	TBS-C5(38)
28	L 4	GG	PN1-50-L
25	K 4	YE	PN1-50-M
24	T 4	BE	TBS-4(77)
22	L 3	WH	PN1-49-L
18	K 3	OR	PN1-49-M
17	T 3	GR	TBS-3(37)
15	L 2	GY	PN1-48-L
12	K 2	RE	PN1-48-M
11	T 2	YE	TBS-C2(76)
9	L 1	VI	PN1-47-L
6	K 1	BR	PN1-47-M
5	T 1	OR	TBS-C1(36)
4	+10.6		
3	+10.6	ORI2	RA-+10.6

PB (Preset for Over Tone and Buffer) Circuit Diagram

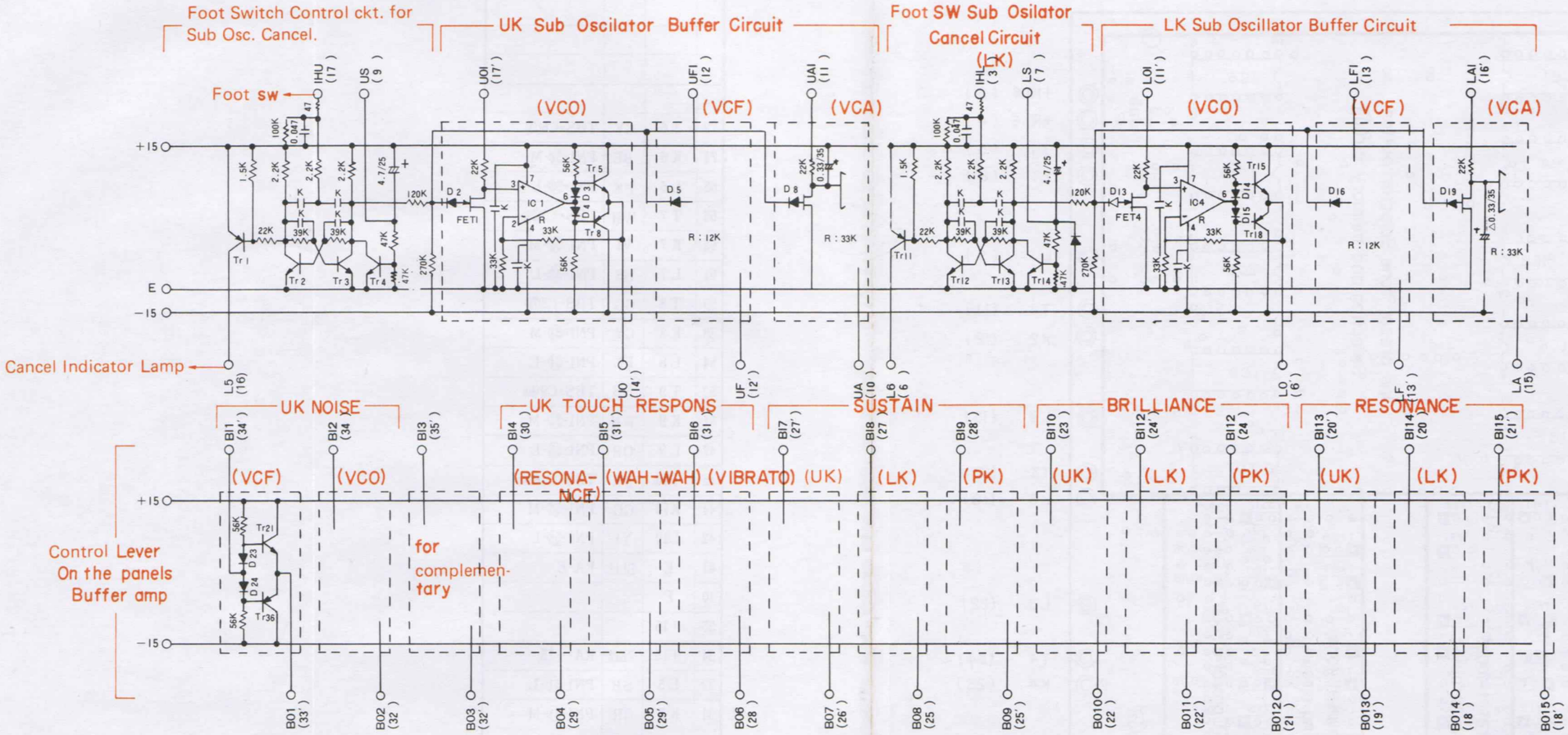

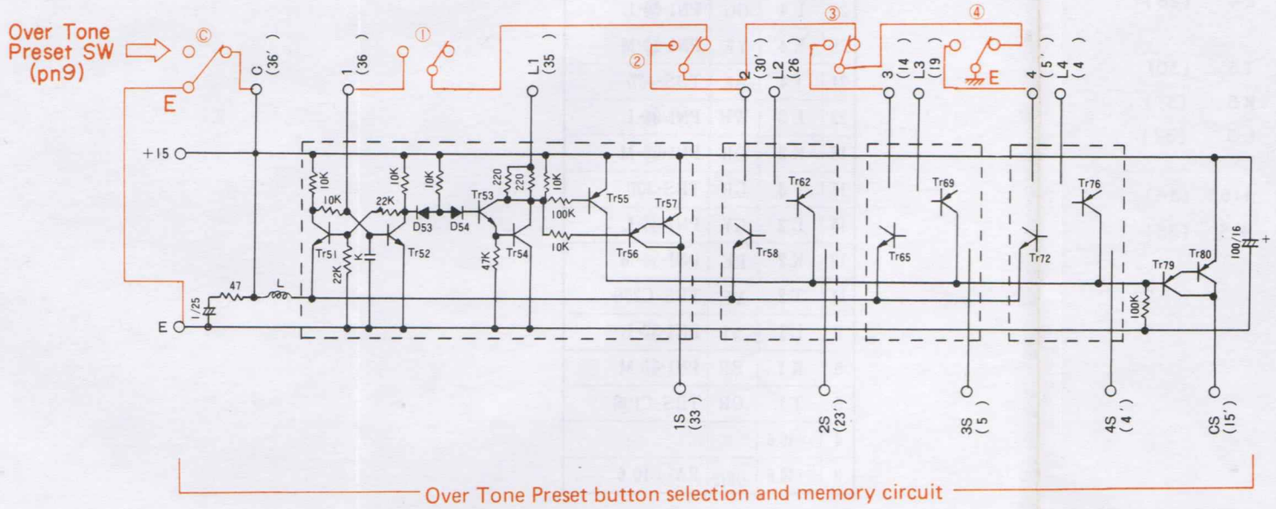

Note) 1. Transistor

Tr1,8～11, 18～20, 36～50 55, 56, 62, 63, 69, 70, 76, 77, 79	2SA561 (Y)
Tr2～7, 12～17, 21～35 51～54, 58～61, 65～68, 72～75	2SC458 (C)
Tr57, 64, 71, 78, 80	2SA509 (Y)
2. FET1～6	2SK30A (Y)
3. Diode D1, 3～11, 13～60	1S2473 (VE)
4. IC IC1～6	TA7504M

5. Ceramic Capacitor
   K marked 1000P (K)
6. Choke Coil
   L marked : GA0096
7. △ marked : Tantalum Capacitor

PB Circuit Board, Adjustment, Wiring

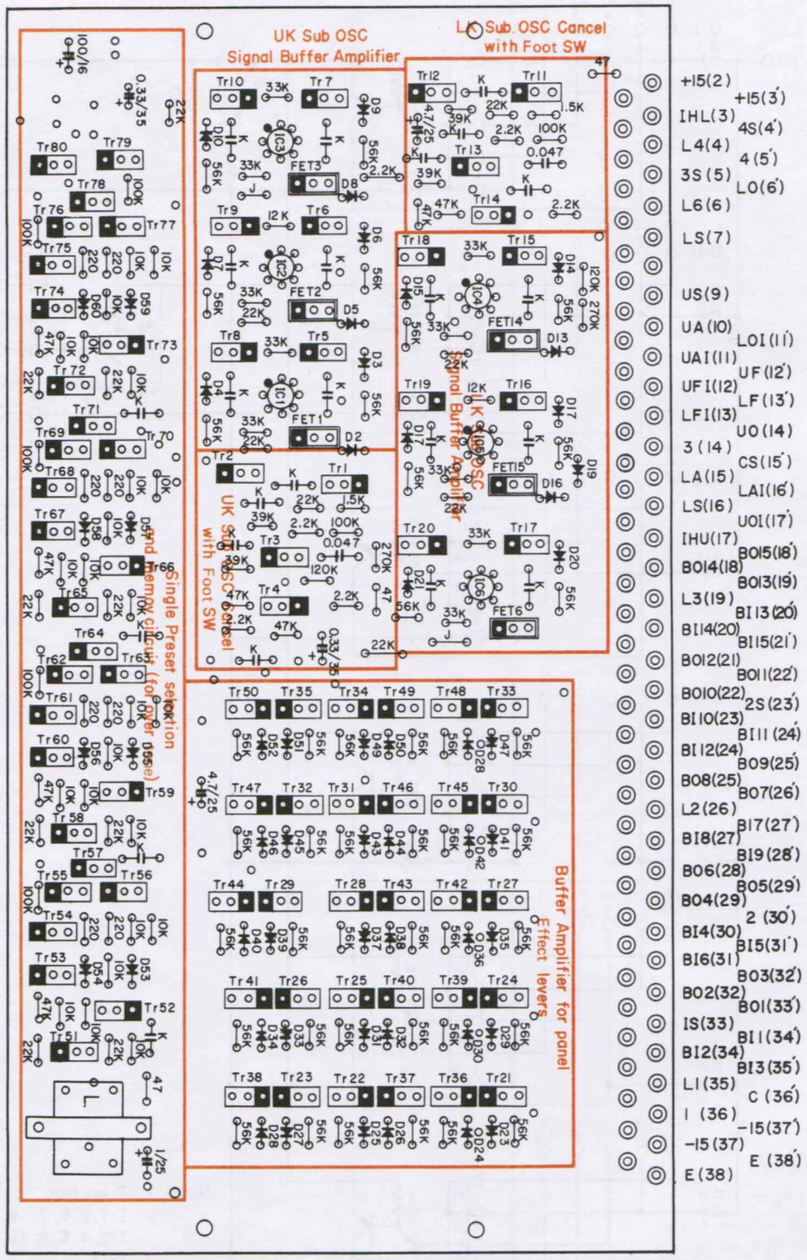

Wirings

P				B			
No.	Terminal	Color of Wire	Direction	No.	Terminal	Color of Wire	Direction
38	−15	E	KL-KL3-M	38'	E		
37	E	−15	KL-LAMP	37'	−15		
36	1	BR	PN9-①-M	36'	C	GR	PN9-⑤-B
35	L 1	RE	PN9-①-1	35'	BI 3		
34	BI 2	VI	PN4-⑤-2	34'	BI 1	BE	PN4-④-2
33	1 S	VI	PN8-⑨	33'	BO 1	GY	MU11-f_3(21)
32	BO 2	BR	MU11-V_2(12)	32'	BO 3		
31	BI 6	YE	PN4-③-2	31'	BI 5	OR	PN4-②-2
30	BI 4	RE	PN4-①-2	30'	2	RE	PN9-②-M
29	BO 4	GG	MU11-Q1(26)	29'	BO 5	PK	MU11-f_4(20)
28	BO 6	SB	MU11-V_3(12)	28'	BI 9	BR	PN1-⑩-2
27	BI 8	PK	PN1-⑨-2	27'	BI 7	GG	PN1-⑧-2
26	L 2	OR	PN9-②-1	26'	BO 7	YE	MU18-SUS(72)
25	BO 8	YE	ML18-SUS(72)	25'	BO 9	GR	MP11-SUS(72)
24	BI12	VI	PN1-㊷-2	24'	BI11	BE	PN1-㊶-2
23	BI10	YE	PN1-㊵-2	23'	2 S	GY	PN8-⑮
22	BO10	BE	MU11-f_1(23)	22'	BO11	BE	ML11-f_1(23)
21	BO12	BE	MP11-f_1(23)	21'	BI15	GG	PN1-㊺-2
20	BI14	WH	PN1-㊹-2	20'	BI13	GY	PN1-㊸-2
19	L 3	YE	PN9-③-1	19'	BO13	GR	MU11-Q_2(25)
18	BO14	GR	ML11-Q_2(25)	18'	BO15	VI	MP11-Q_2(25)
17	IHU	RE	PB-IHL(3)	17'	UOI	BE	PN5-④-C
16	L 5	SB	PN7-⑦-L	16'	LAI	GY	PN7-⑤-C
15	LA	YE	ML18-LC2(56)	15'	CS	VI	PN1-⑪
14	3	OR	PN9-③-M	14'	UO	RE	MU11-V (14)
13	LFI	VI	PN7-④-C	13'	LF	OR	ML11-f_2(22)
12	UFI	VI	PN5-⑤-C	12'	UF	YE	MU11-f_2(22)
11	UAI	GY	PN5-⑥-C	11'	LOI	GR	PN7-③-C
10	UA	YE	MU18-LC2(56)				
9	US	GG	PN7-⑦-C				
7	LS	PK	PN7-⑧-C				
6	L6	BR	PN7-⑧-1	6'	LO	RE	ML11-V_1(14)
5	3 S	WH	PN8-㉑	5'	4	YE	PN9-④-M
4	L 4	GR	PN9-④-1	4'	4 S	BE	OVT-P_1(2)
3	IHL	RE×2	EXP-FS2 PB-IHU(17)				
2	+15	RE12	K1-KN-+15				

OVT (Over Tone) Circuit Diagram

Over Tone Selector Switch Blank Position Compensator When the over tone selector switch is set at any position between the click stops, this circuit creates the same effect as if the key were set at over tone 2.

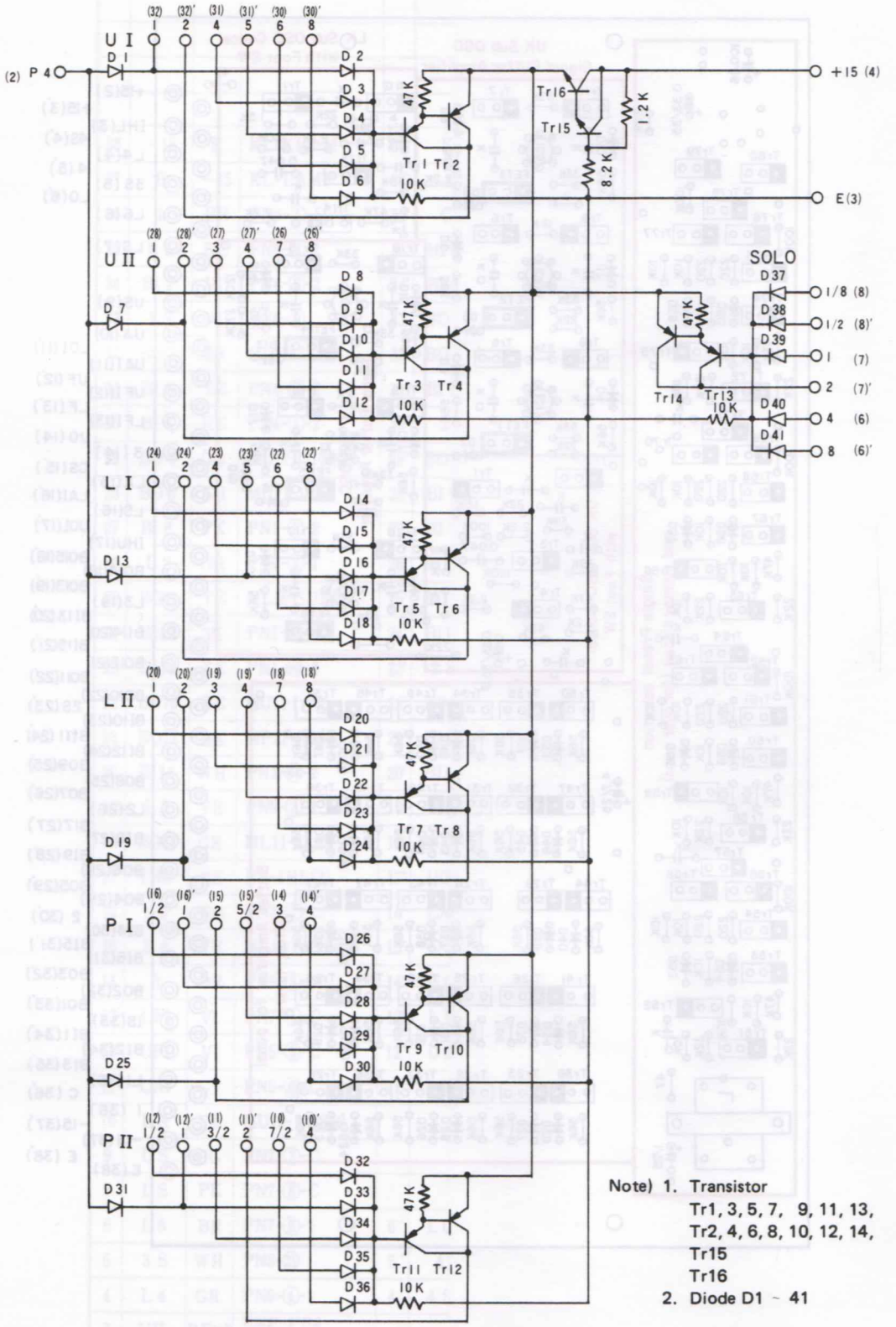

Note) 1. Transistor

Tr1, 3, 5, 7, 9, 11, 13,	2SA561 (Y)
Tr2, 4, 6, 8, 10, 12, 14,	2SA509 (Y)
Tr15	2SC458 (C)
Tr16	2SD234 (Y)
2. Diode D1 ~ 41	1S2473 (VE)

OVT Circuit Board, Wiring

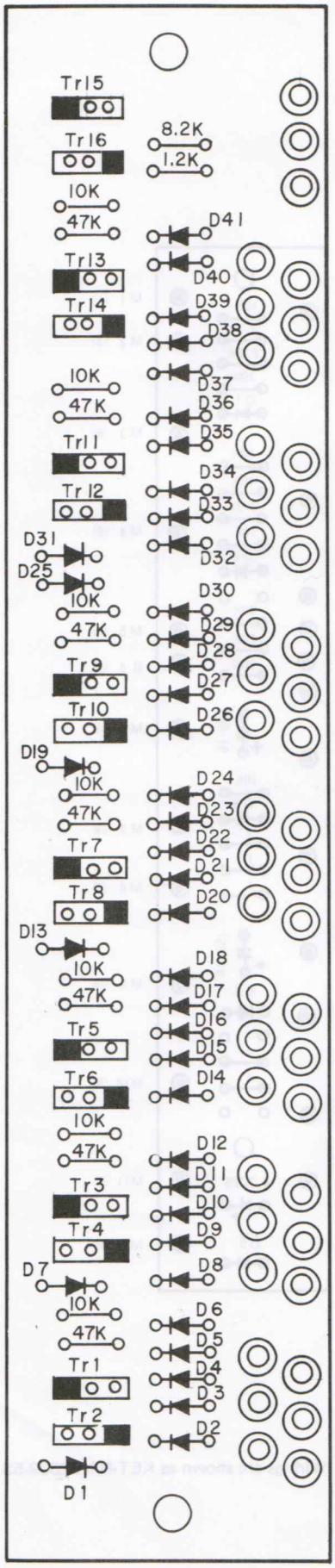

OVT

No.	Terminal	Color of Wire	Direction	No.	Terminal	Color of Wire	Direction
32	U I-1	BR ×3	MU18-I (58) PN 8-⑨ PN 1-⑪	32′	U I-2	RE ×3	MU18-II (59) PN 8-⑨ PN 1-⑪
31	U I-4	OR ×3	MU18-III (58) PN 8-⑨ PN 1-⑪	31′	U I-5	YE ×3	MU11-IV (6) PN 8-⑨ PN 1-⑪
30	U I-6	GR ×3	MU11-V (5) PN 8-⑨ PN 1-⑪	30′	U I-8	BE ×3	MU11-VI (4) PN 8-⑨ PN 1-⑪
28	U II-1	BR ×3	MU28-I (58) PN 8-⑩ PN 1-⑫	28′	U II-2	RE ×3	MU28-II (59) PN 8-⑩ PN 1-⑫
27	U II-3	OR ×3	MU28-III (58) PN 8-⑩ PN 1-⑫	27′	U II-4	YE ×3	MU21-IV (6) PN 8-⑩ PN 1-⑫
26	U II-7	GR ×3	MU21-V (5) PN 8-⑩ PN 1-⑫	26′	U II-8	BE ×3	MU21-VI (4) PN 8-⑩ PN 1-⑫
24	L I-1	BR ×3	ML18-I (58) PN 8-⑪ PN 1-⑬	24′	L I-2	RE ×3	ML18-II (59) PN 8-⑪ PN 1-⑬
23	L I-4	OR ×3	ML18-III (58) PN 8-⑪ PN 1-⑬	23′	L I-5	YE ×3	ML11-IV (6) PN 8-⑪ PN 1-⑬
22	L I-6	GR ×3	ML11-V (5) PN 8-⑪ PN 1-⑬	22′	L I-8	BE ×3	ML11-VI (4) PN 8-⑪ PN 1-⑬
20	L II-1	BR ×3	ML28-I (58) PN 8-⑫ PN 1-⑭	20′	L II-2	RE ×3	ML28-II (59) PN 8-⑫ PN 1-⑭
19	L II-3	OR ×3	ML28-III (58) PN 8-⑫ PN 1-⑭	19′	L II-4	YE ×3	ML21-IV (6) PN 8-⑫ PN 1-⑭
18	L II-7	GR ×3	ML21-V (5) PN 8-⑫ PN 1-⑭	18′	L II-8	BE ×3	ML21-VI (4) PN 8-⑫ PN 1-⑭
16	P I-½	BR ×3	MP11-I (58) PN 8-⑬ PN 1-⑮	16′	P I-1	RE ×3	MP11-II (59) PN 8-⑬ PN 1-⑮
15	P I-1	OR ×3	MP11-III (58) PN 8-⑬ PN 1-⑮	15′	P I-5/2	YE ×3	MP11-IV (6) PN 8-⑬ PN 1-⑮
14	P I-3	GR ×3	MP11-V (5) PN 8-⑬ PN 1-⑮	14′	P I-4	BE ×3	MP11-VI (4) PN 8-⑬ PN 1-⑮
12	P II-½	BR ×3	MP31-I (58) PN 8-⑭ PN 1-⑯	12′	P II-1	RE ×3	MP31-II (59) PN 8-⑭ PN 1-⑯
11	P II-3/2	OR ×3	MP31-III (58) PN 8-⑭ PN 1-⑯	11′	P II-2	YE ×3	MP31-IV (6) PN 8-⑭ PN 1-⑯
10	P II-7/2	GR ×3	MP21-V (5) PN 8-⑭ PN 1-⑯	10′	P II-4	BE ×3	MP21-VI (4) PN 8-⑭ PN 1-⑯
8	S-1/8	BR ×2	MS-I (58) PN 2-㉔	8′	S-½	RE ×2	MS-II (59) PN 2-㉔
7	S-1	OR ×2	MS-III (58) PN 2-㉔	7′	S-2	YE ×2	MS-IV (6) PN 2-㉔
6	S-4	GR ×2	MS-V (5) PN 2-㉔	6′	S-8	BE ×2	MS-VI (4) PN 2-㉔
4	+15	RE 12	RA-+15				
3	E	BL 12	RA-E				
2	P4′	BE	PB-4S(4′)				

SR (Solo Touch Response) Circuit Diagram & Circuit Board

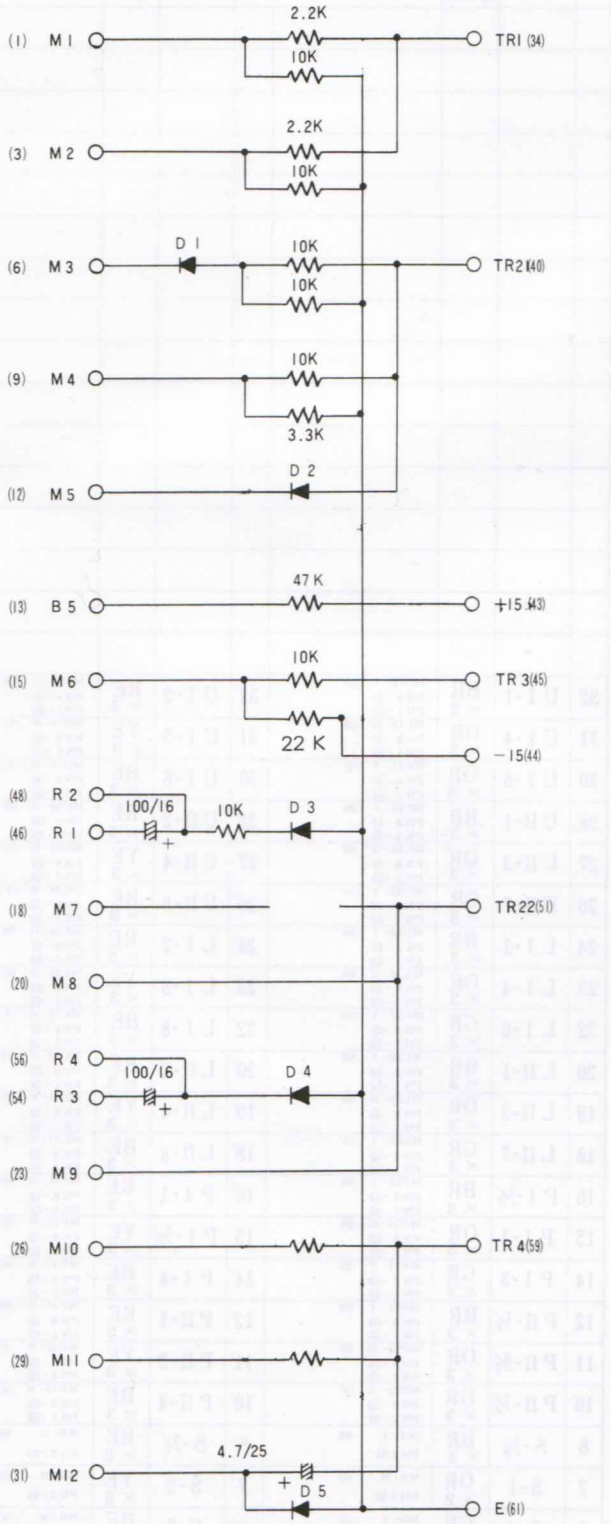

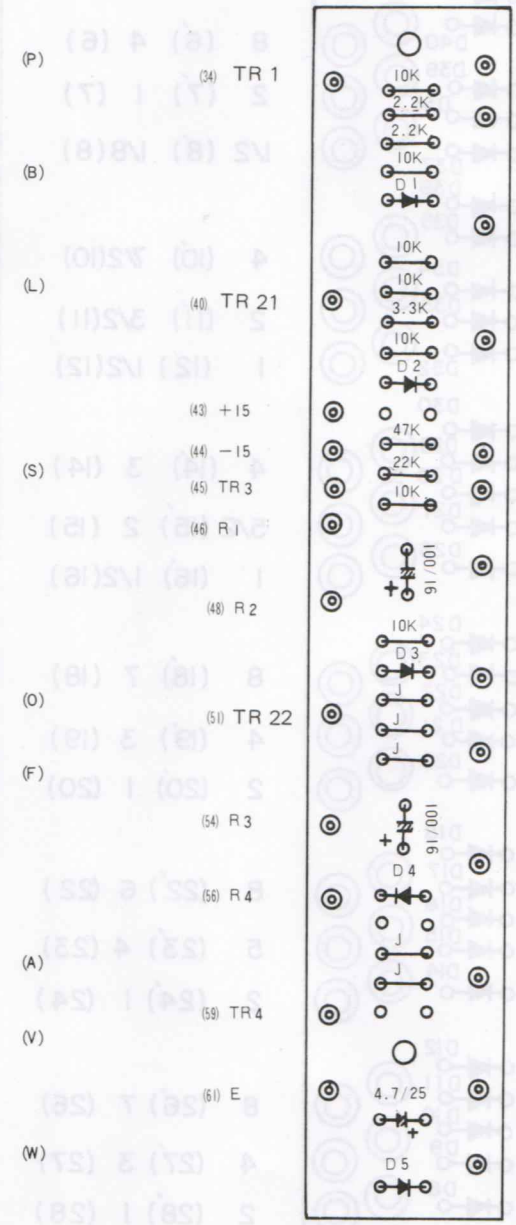

※ Wirings are shown as KET-NA 02899-53

TU,OV,WM,R Circuit Diagram & Circuit Board

〔TU〕

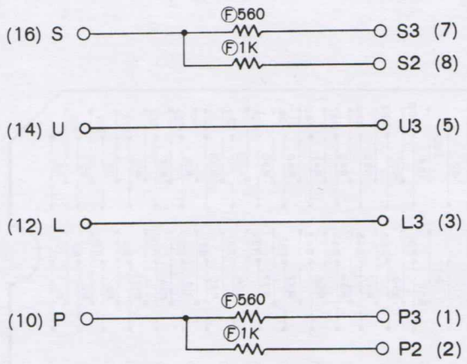

Note)
Ⓕ mark: Metal film resistor MR-25 ±2%

Wirings are shown as P.93 (PN 8)

〔OV〕 (OV1～OV4)

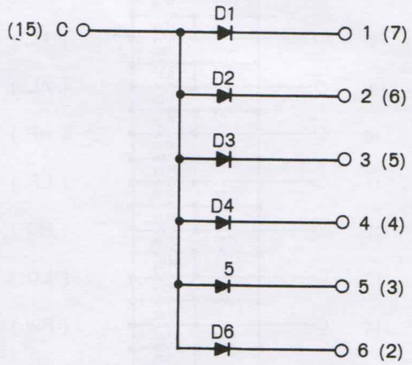

Note) Diode
D1～6 1S1555

Wirings are shown as P. 78 (PN1) : OV1
–do.– 93 (PN8) : OV2
–do.– 94 (PN8) : OV3,OV4

〔WM〕

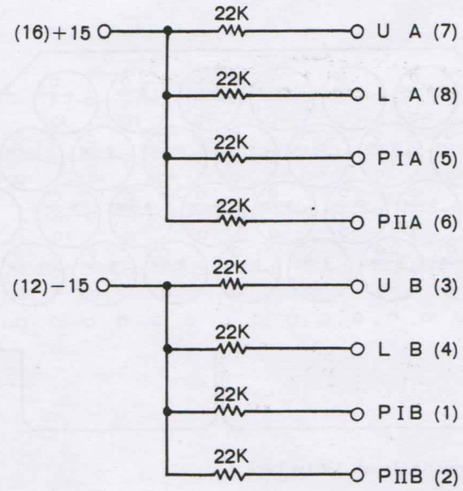

※ Wiring is refer to P.93(PN8)

〔R〕

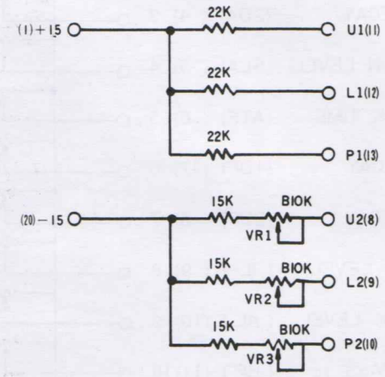

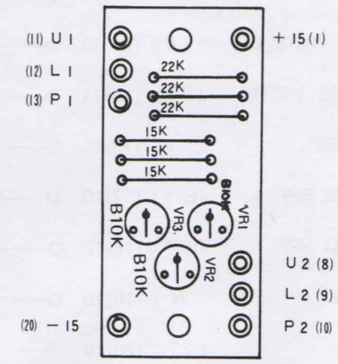

Wirings are shown as P.80 (PN 1)

Adjustment
Brilliance VR variable-range

Condition:
Brilliance lever for UK, LK, PK are at the control position.

UK ..... Set VR1 for 0V (measure point: f1 (23) terminal on MU ckt board)
LK ..... Set VR2 for 0V (measure point: f1 (23) terminal on ML ckt board)
PK ..... Set VR3 for 0V (measure point: f1 (23) terminal on MP ckt board)

If the above setting is completed, the voltage at the f1 terminal according to the Brilliance lever at the moved between –4V and +9V.

TS (Variable Tone Module) Circuit Diagram & Circuit Board, Factory Setting Tone Module Circuit Diagram & Circuit Board

Variable Tone Module

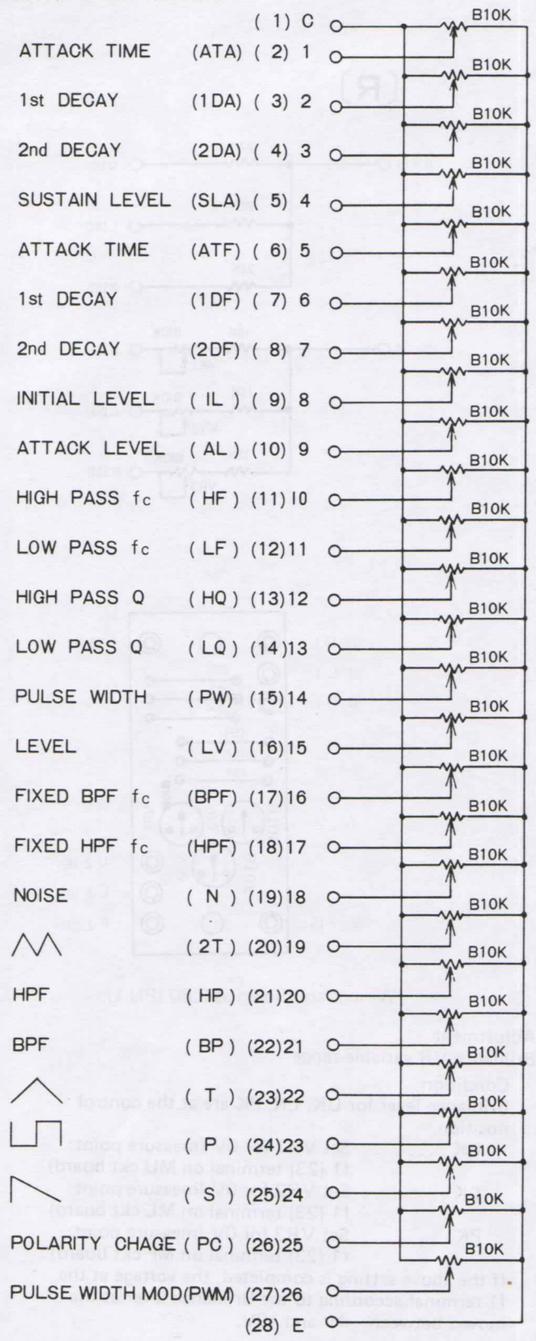

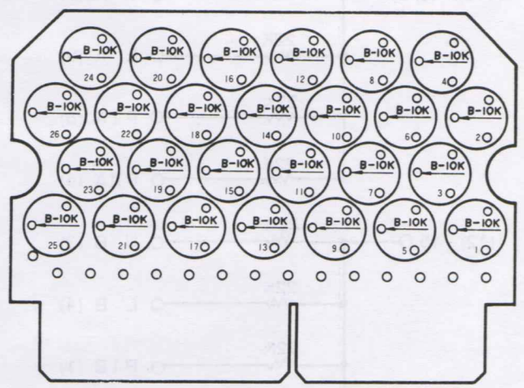

Note) Potentio Meter : 3321H Type

Note) Volume : 3321H

Factory Setting Tone Module

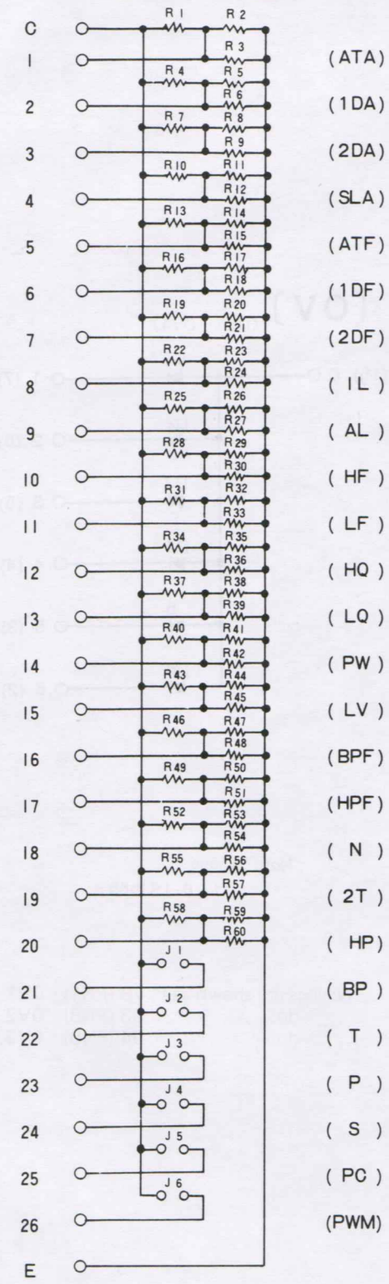

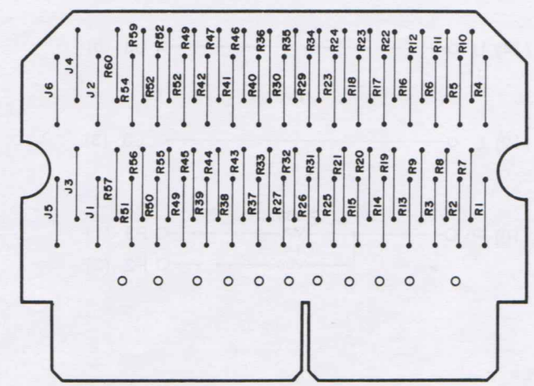

Note) $R_1 \sim R_{60}$: Resistance degree in the Tone Module are preset for each tone producing.

TV (Touch Vibrato) Circuit Diagram & Circuit Board

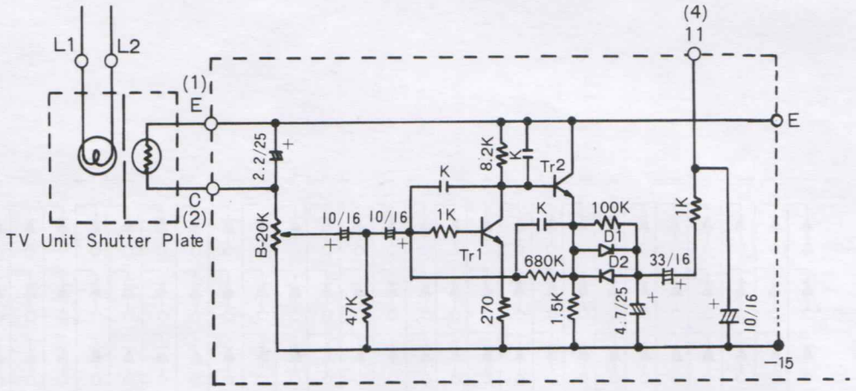

Note) 1. Transistor
Tr1, 2 : 2SC458 (C)
2. Diode D_1, D_2 : 1S2473 (VE)
3. Ceramic Capacitor
K mark : 1000P (K)
4. Volume : 3321H

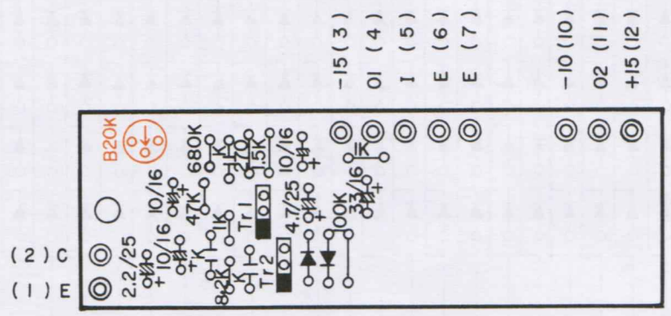

UK touch response detector circuit
(for VIBRATO)

Output adjustment -- VR1:

Note: Check that nothing is abnormal on the shutter board.

While moving an upper manual key left and right, adjust for the following waveform at terminal 01 (4).

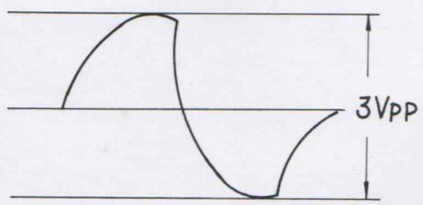

BB (Buffer Amp.for Control Signal) Circuit Diagram & Circuit Board

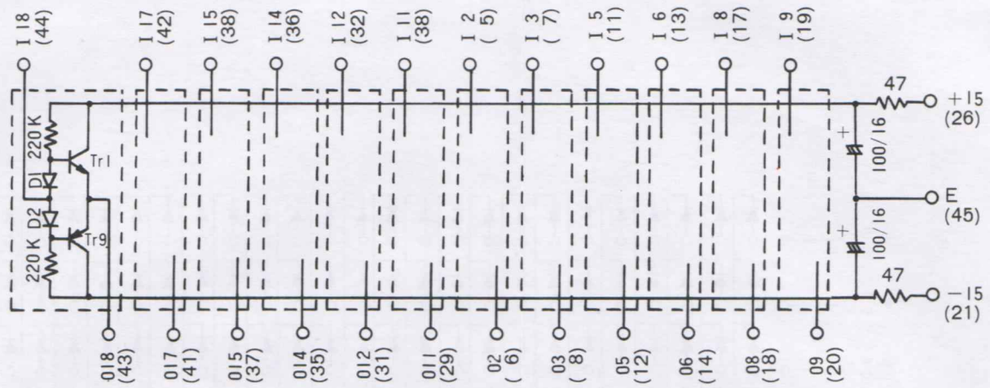

Note) 1. Transistor
Tr 1, 2, 4, 5, 7, 8, 11, 12, 14, 15, 17, 18 : 2SC458 (C)
Tr 19,20, 22, 23, 25, 26, 29, 30, 32, : 2SA561 (Y)
2. Diode
D1～36 : 1S2473 (VE)

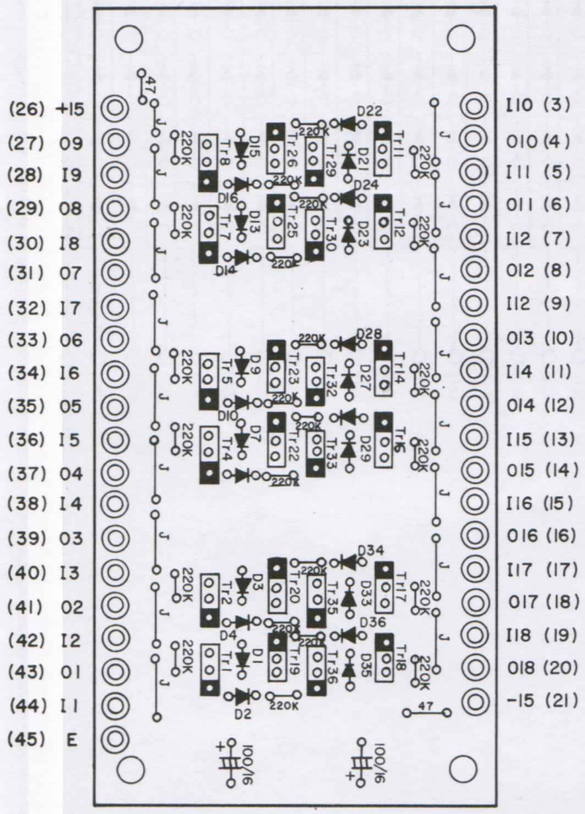

Note) 1. Printo Circuit Board 16871
2. Transistor
Tr 1-18 2SC458 (C)
Tr19-36 2SA561 (Y)
3. Diode
D1-36 1S2473

B B							
No.	Terminal	Color of wire	Direction	No.	Terminal	Color of wire	Direction
23				46			
22				45	E	BL12	RA-E
21	−15	GY12		44	I 18	GY	TBP-20'(6)
20	O 9	OR	ML11-G333)	43	O18	OR	MP21-G333)
19	I 9	GY	TBL-2026)	42	I 17	VI	TBP-19'(6)
18	O 8	RE	ML11-G234)	41	O17	RE	MP21-G234)
17	I 8	VI	TBL-1966)	40	I 16		
16	O 7			39	O16		
15	I 7			38	I 15	GY	TBP-2026)
14	O 6	OR	MU21-G333)	37	O15	OR	MP11-G333)
13	I 6	GY	TBU-20'(6)	36	I 14	VI	TBP-1966)
12	O 5	RE	MU21-G234)	35	O14	RE	MP11-G234)
11	I 5	VI	TBU-19'(46)	34	I 13		
10	O 4			33	O13		
9	I 4			32	I 12	GY	TBL-20'(6)
8	O 3	OR	MU11-G333)	31	O12	OR	ML21-G333)
7	I 3	GY	TBU-2026)	30	I 11	VI	TBL-19'(46)
6	O 2	RE	MU11-G234)	29	O11	RE	ML21-G234)
5	I 2	VI	TBU-1966)	28	I 10		
4	O 1			27	O10		
3	I 1			26	+15	RE12	RA-+15
2				25			
1				24			

TBU, TBL, TBP, TBS (Tone Board) Circuit Diagram

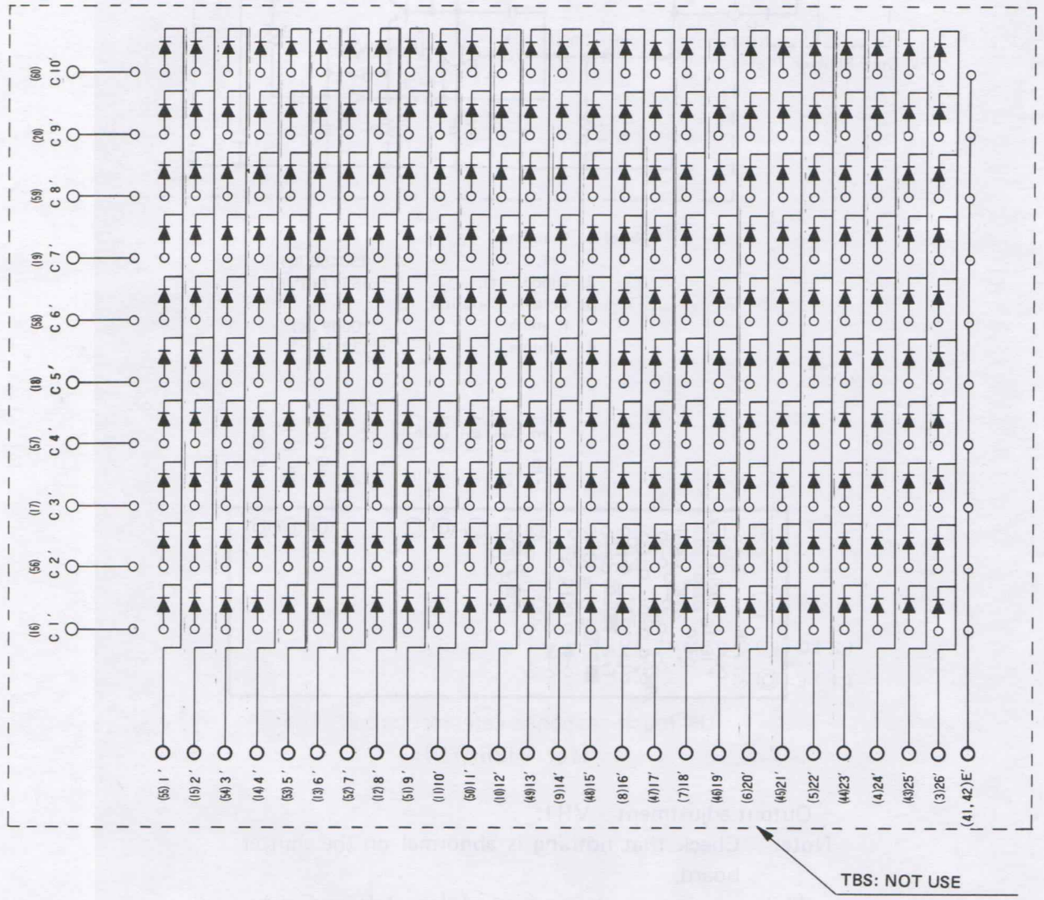

Note) 1. Diode : 1S1555
2. Connector : $PB_{08\text{-}28\text{-}23}$TOG-N

TBU,TBL,TBP,TBS, Wiring

TBU							
No.	Terminal	Color of wire	Direction	No.	Terminal	Color of wire	Direction
40	C 9	WH	PSM1-I 9(48)	80	C10	GG	PSM1-I 10(46)
39	C 7	VI	PSM -I 7(52)	79	C 8	GR	PSM1-I 8(50)
38	C 5	GR	PSM1-I 5(17)	78	C 6	BE	PSM1-I 6(54)
37	C 3	OR	PSM1-I 3(26)	77	C 4	BE	PSM1-I 4(22)
36	C 1	BR	PSM1-I 1(28)	76	C 2	RE	PSM1-I 2(32)
35	2	RE	BAU-I 4A(10)	75	1	BR	BAU-I 5A(12)
34	4	YE	BAU-I 1A(4)	74	3	OR	BAU-I 14A(30)
33	6	BE	BAU-I 2A(6)	73	5	GR	BAU-I 13A(28)
32	8	GR	BAU-I 10A(22)	72	7	VI	BAU-I 11A(24)
31	10	GG	BAU-I 7A(16)	71	9	WH	BAU-I 3 A(8)
30	12	PK	BAU-I 12A(26)	70	11	SB	BAU-I 8 A(18)
29	14	RE	BAU-I 15A(32)	69	13	BR	BAU-I 6 A(14)
28	16	YE	BAU-I 16A(34)	68	15	OR	BAU-I 9 A(20)
27	18	VI	RHY5-C1(17)	67	17	GR	BAU-I 17A(36)
26	20	GR	BB-I 3	66	19	VI	BB-I 2
25	22	GG	MU11-G5(31)	65	21	WH	MU11-G 4(32)
24	24	PK	MU11-G7(29)	64	23	SB	MU11-G 6(30)
23	26	RE	MOS-C1(55)	63	25	BR	MU11-P C(47)
22				62	E	BL12	TBU-E′(42)
21				61	E		
20	C 9′	PK	PSM1-II9(8)	60	C10′	SB	PSM1-II10(6)
19	C 7′	GR	PSM1(12)	59	C 8′	VI	PSM1-II 8(10)
18	C 5′	YE	PSM1-II5(16)	58	C 6′	WH	PSM1-II 6(14)
17	C 3′	YE	PSM1-II3(25)	57	C 4′	GR	PSM1-II 4(21)
17	C 1′	GR	PSM1-II1(29)	56	C 2′	OR	PSM1-II 2(31)
15	2′	RE	BAU-I 4 B(50)	55	1′	BR	BAU-I 5 B(52)
14	4′	YE	BAU-I 1 B(44)	54	3′	OR	BAU-I 14B(70)
13	6′	BE	BAU-I 2 B(46)	53	5′	GR	BAU-I 13B(68)
12	8′	GR	BAU-I 10B(62)	52	7′	VI	BAU-I 11B(64)
11	10′	GG	BAU-I 7 B(56)	51	9′	WH	BAU-I 3 B(48)
10	12′	PK	BAU-I 12B(66)	50	11′	VI	BAU-I 8 B(58)
9	14′	RE	BAU-I 15B(72)	49	13′	BR	BAU-I 6 B(54)
8	16′	YE	BAU-I 16B(74)	48	15′	OR	BAU-I 9 B(60)
7	18′	BE	RHY5-C2(19)	47	17′	GR	BAU-I 17B(76)
6	20′	GR	BB-I 6	46	19′	VI	BB-I 5
5	22′	GG	MU21-G5(31)	45	21′	WH	MU21-G 4(32)
4	24′	PK	MU21-G7(29)	44	23′	SB	MU21-G 6(30)
3	26′	OR	MOS-C5(68)	43	25′	BR	MU21-P C(47)
2				42	E′	BL12×2	TBL-E62 TBU-E62
1				41	E′		

TBL							
No.	Terminal	Color of wire	Direction	No.	Terminal	Color of wire	Direction
40	C 9	WH	PSM2-I 9(48)	89	C10	GG	PSM-I 10(46)
39	C 7	VI	PSM2-I 7(52)	79	C 8	GR	PSM-I 8(50)
38	C 5	GR	PSM2-I 5(17)	78	C 6	BE	PSM-I 6(54)
37	C 3	OR	PSM2-I 3(26)	77	C 4	BE	PSM-I 4(22)
36	C 1	BR	PSM2-I 1(28)	76	C 2	RE	PSM-I 2(32)
35	2	RE	BAL-I 4 A(10)	75	1	BR	BAL-I 5 A(12)
34	4	YE	BAL-I 1 A(4)	74	3	OR	BAL-I 14A(30)
33	6	BE	BAL-I 2 A(6)	73	5	RE	BAL-I 13A(28)
32	8	GY	BAL-I 10A(22)	72	7	VI	BAL-I 11A(24)
31	10	GR	BAL-I 7 A(16)	71	9	WH	BAL-I 3 A(8)
30	12	PK	BAL-I 12A(26)	70	11	SB	BAL-I 8 A(18)
29	14	RE	BAL-I 15A(32)	69	13	BR	BAL-I 6 A(14)
28	16	YE	BAL-I 16A(34)	68	15	OR	BAL-I 9 A(20)
27	18	VI	RHY5-C3(21)	67	17	RE	BAL-I 17A(36)
26	20	GY	BB-I 9	66	19	VI	BB-I 8
25	22	GR	ML11-G5(31)	65	21	WH	ML11-G 4(32)
24	24	PK	ML11-G7(29)	64	23	SB	ML11-G6(30)
23	26	YE	MOS-C2(54)	63	25	BR	ML11-P C(47)
22				62	E	BL12×2	TBU-E′(42) TBU-E′(42)
21				61	E		
20	C 9′	PK	PSM2-II9(8)	60	C10′	SB	PSM2-II10(6)
19	C 7′	GY	PSM2-II7(12)	59	C 8′	VI	PSM2-II 8(10)
18	C 5′	YE	PSM2-II5(16)	58	C 6′	WH	PSM2-II 6(14)
17	C 3′	YE	PSM2-II3(25)	57	C 4′	RE	PSM2-II 4(21)
16	C 1′	GR	PSM2-II1(29)	56	C 2′	OR	PSM2-II 2(31)
15	2′	RE	BAL-I 4 B(50)	55	1′	BR	BAL-I 5 B(52)
15	4′	YE	BAL-I 1 B(44)	54	3′	OR	BAL-I 14B(70)
13	6′	BE	BAL-I 2 B(46)	53	5′	BR	BAL-I 13B(68)
12	8′	GY	BAL-I 10B(62)	52	7′	OR	BAL-I 11B(64)
11	10′	GR	BAL-I 7 B(56)	51	9′	RE	BAL-I 3 B(48)
10	12′	PK	BAL-I 12B(66)	50	11′	VI	BAL-I 8 B(58)
9	14′	RE	BAL-I 15B(72)	49	13′	WH	BAL-I 6 B(54)
8	16′	YE	BAL-I 16B(74)	48	15′	SB	BAL-I 9 B(60)
7	18′	BE	RHY5-C4(23)	47	17′	BR	BAL-I 17B(76)
6	20′	GY	BB-I 12	46	19′	OR	BB-I 11
5	22′	GR	ML21-G5(31)	45	21′	RE	ML21-G4(32)
4	24′	PK	ML21-G7(29)	44	23′	VI	ML21-G6(30)
3	26′	GR	MOS-C6(66)	43	25′	SB	ML21-P C(47)
2				42	E′	BR	TBP-E62 TBL-E62
1				41	E′		

TBP							
No.	Terminal	Color of wire	Direction	No.	Terminal	Color of wire	Direction
40	C 9	WH	PSM3-I 9(48)	80	C10	GG	PSM3-I 10(46)
39	C 7	VI	PSM3-I 7(52)	79	C 8	GY	PSM3-I 8(50)
38	C 5	GR	PSM3-I 5(17)	78	C 6	BE	PSM3-I 6(54)
37	C 3	OR	PSM3-I 3(26)	77	C 4	BE	PSM3-I 4(22)
36	C 1	BR	PSM3-I 1(28)	76	C 2	RE	PSM3-I 2(32)
35	2	RE	BAP-I 4 A(10)	75	1	WH	BAP-I 5A(12)
34	4	YE	BAP-I 1 A(4)	74	3	OR	BAP-I 14A(30)
33	6	BE	BAP-I 2 A(6)	73	5	GR	BAP-I 13A(28)
32	8	GR	BAP-I 10A(22)	72	7	VI	BAP-I 11A(24)
31	10	GG	BAP-I 7 A(16)	71	9	WH	BAP-I 3 A(8)
30	12	PK	BAP-I 12A(26)	70	11	SB	BAP-I 8 A(18)
29	14	RE	BAP-I 15A(32)	69	13	BR	BAP-I 6 A(14)
28	16	YE	BAP-I 16A(34)	68	15	OR	BAP-I 9 A(20)
27	18	VI	RHY-C5(28)	67	17	GR	BAP-I 17A(36)
26	20	VI	BB-I 15	66	19	VI	BB-I 14
25	22	GG	MP11-G5(31)	65	21	WH	MP11-G5(31)
24	24	PK	MP11-G7(29)	64	23	SB	MP11-G7(29)
23	26	YE	MOS-C3(62)	63	25	BR	MP11-P C(47)
22				62	E	BL12×2	TBP-E′(42) TBL-E′(42)
21				61	E		
20	C 9′	PK	PSM3-II9(8)	60	C10′C	SB	PSM3-II10(6)
19	C 7′	GR	PSM3-II7(12)	59	C 8′	VI	PSM3-II 8(10)
18	C 5′	YE	PSM3-II5(16)	58	C 6′	WH	PSM3-II 6(14)
17	C 3′	YE	PSM3-II3(25)	57	C 4′	GR	PSM3-II 4(21)
16	C 1′	GR	PSM3-II1(29)	56	C 2′	OR	PSM3-II 2(31)
15	2′	RE	BAP-I 4 B(50)	55	1′	BR	BAP-I 5 B(52)
14	4′	YE	BAP-I 1 B(44)	54	3′	OR	BAP-I 14B(70)
13	6′	BE	BAP-I 2 B(46)	53	5′	GR	BAP-I 13B(68)
12	8′	GR	BAP-I 10B(62)	52	7′	Vı	BAP-I 11B(64)
11	10′	GG	BAP-I 7 B(56)	51	9′	WH	BAP-I 3 B(48)
10	12′	PK	BAP-I 12B(66)	50	11′	SB	BAP-I 8 B(58)
9	14′	RE	BAP-I 15B(72)	49	13′	BR	BAP-I 6 B(54)
8	16′	YE	BAP-I 16B(74)	48	15′	OR	BAP-I 9 B(60)
7	18′	BE	RHY5-C6(30)	47	17′	GR	BAP-I 17B(76)
6	20′	GR	BB-I 18	46	19′	VI	BB-I 17
5	22′	GG	MP21-G5(31)	45	21′	WH	MP21-G4(32)
4	24′	PK	MP21-G7(29)	44	23′	SB	MP21-G6(30)
3	26′	VI	MOS-C7(64)	43	25′	BR	MP21-P C(47)
2				42	E′	BL12×2	TBS-E62 TBP-E62
1				41	E′		

TBS							
No.	Terminal	Color of wire	Direction	No.	Terminal	Color of wire	Direction
40	C 9	SB	SM-T 9	80	C10	PK	SM-T10
39	C 7	WH	SM-T 7	79	C 8	GG	SM-T 8
38	C 5	VI	SM-T 5	78	C 6	GY	SM-T 6
37	C 3	GR	SM-T 3	77	C 4	BE	SM-T 4
36	C 1	OR	SM-T 1	76	C 2	YE	SM-T 2
35	2	RE	MS-1DTA(9)	75	1	BR	MS-ATA(44)
34	4	YE	MS-SL(45)	74	3	OR	MS-2DTA(73)
33	6	BE	MS-1DTF(48)	73	5	GR	MS-ATF(69)
32	8	GY	MS-IL(70)	72	7	VI	MS-2DTF(71)
31	10	GG	MS-f 6(15)	71	9	WH	MS-A L(49)
30	12	PK	MS-Q 3(24)	70	11	SB	MS-f 8(18)
29	14	RE	MS-PW(74)	69	13	BR	MS-Q 4(27)
28	16	YE	MS-f c13(75)	68	15	OR	MS-L C 1(61)
27	18	BE	RHY5-C7(36)	67	17	GR	MS-f c(14)(76)
26	20	GY	MS-G 3(33)	66	19	VI	MS-G 2(34)
25	22	GG	MS-G 5(31)	65	21	WH	MS-G 4(32)
24	24	PK	MS-G 7(29)	64	23	SB	MS-G 6(30)
23	26	GY	MOS-C4(71)	63	25	BR	MS-P C(47)
22				62	E	BL12×2	RA-E TBP-E′(42)
21				61	E		
20				60			
19				59			
18				58			
17				57			
16				56			
15				55			
14				54			
13				53			
12				52			
11				51			
10				50			
9				49			
8				48			
7				47			
6				46			
5				45			
4				44			
3				43			
2				42			
1				41			

SH (Sample Hold) Circuit Diagram & Circuit Board

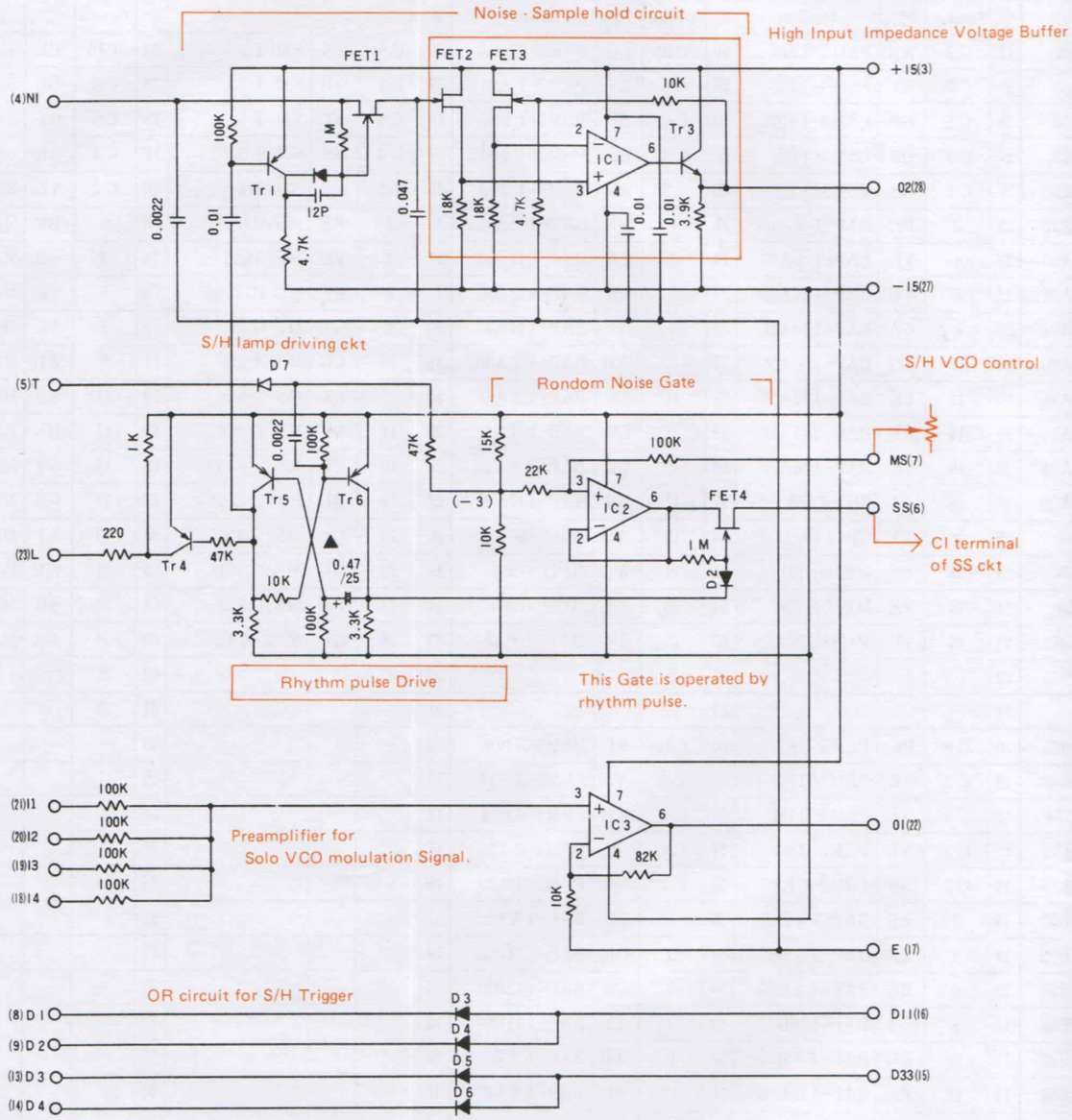

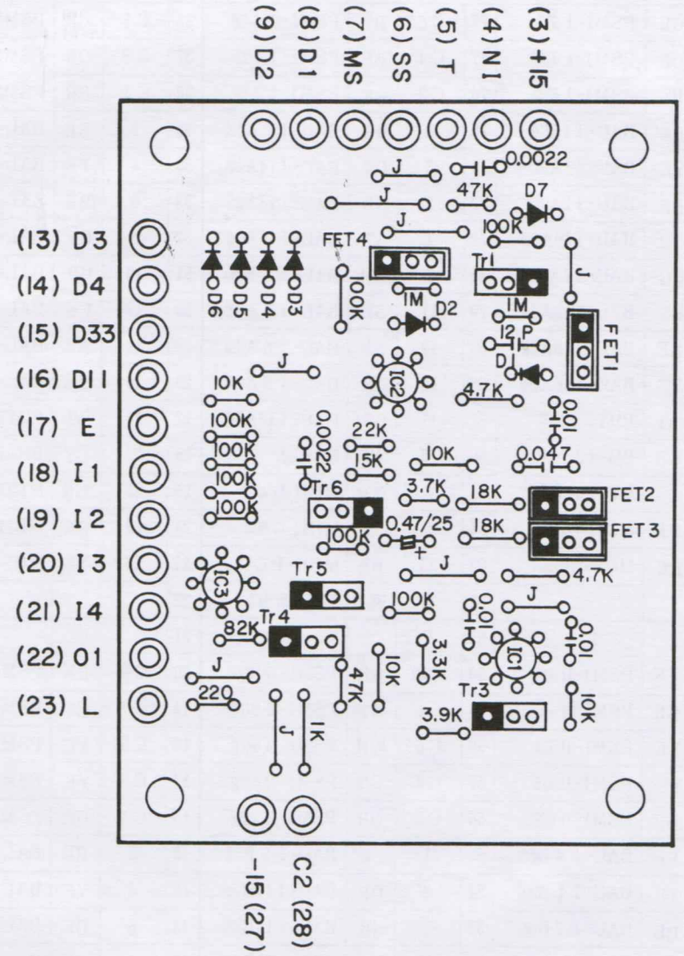

Wirings are shown as P.81 (PN 2)

Note)

1. Transistor
   - Tr1, 4～6 : 2SA561(Y)
   - Tr3 : 2SC458(C)
2. FET1～4 : 2SK30A(Y)
3. Diode D_1～D_7 : 1S2473(VE) IS2473(VE)
4. IC1～3 : TA7504M
5. 12P : Celamic Capacitor
6. ▲mark : Solid Aluminum Capacitor

KAS (Key Assigner) Circuit Diagram

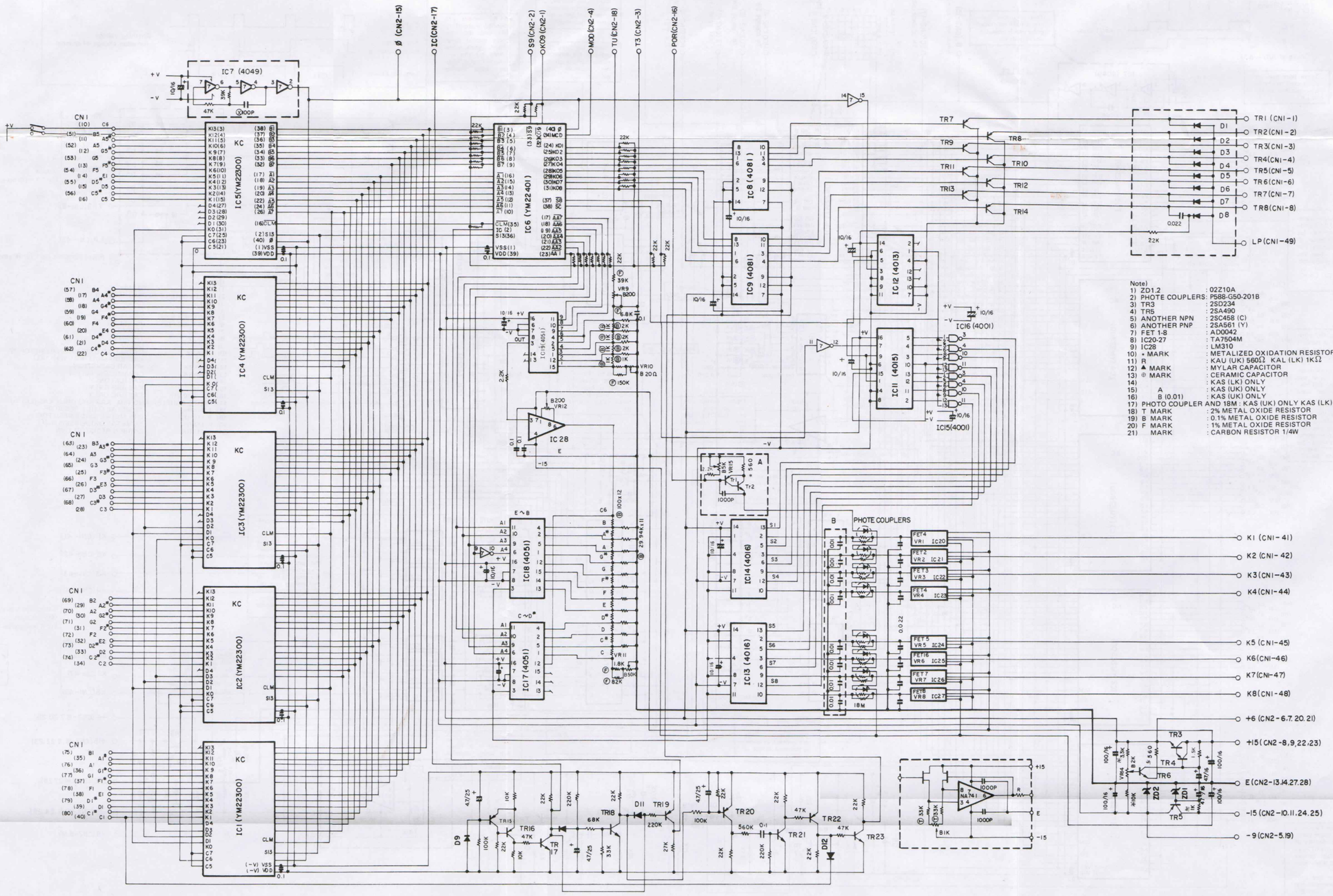

Note)
1) ZD1.2 : 02Z10A
2) PHOTE COUPLERS: P588-G50-201B
3) TR3 : 2SD234
4) TR5 : 2SA490
5) ANOTHER NPN : 2SC458 (C)
6) ANOTHER PNP : 2SA561 (Y)
7) FET 1-8 : AD0042
8) IC20-27 : TA7504M
9) IC28 : LM310
10) * MARK : METALIZED OXIDATION RESISTOR 1W
11) R : KAU (UK) 560Ω KAL (LK) 1KΩ
12) ▲ MARK : MYLAR CAPACITOR
13) ⊕ MARK : CERAMIC CAPACITOR
14) : KAS (LK) ONLY
15) A : KAS (UK) ONLY
16) B (0.01) : KAS (UK) ONLY
17) PHOTO COUPLER AND 18M : KAS (UK) ONLY KAS (LK) SHORT
18) T MARK : 2% METAL OXIDE RESISTOR
19) B MARK : 0.1% METAL OXIDE RESISTOR
20) F MARK : 1% METAL OXIDE RESISTOR
21) MARK : CARBON RESISTOR 1/4W

KAS (Key Assigner) Circuit Diagram, Operation Out Line

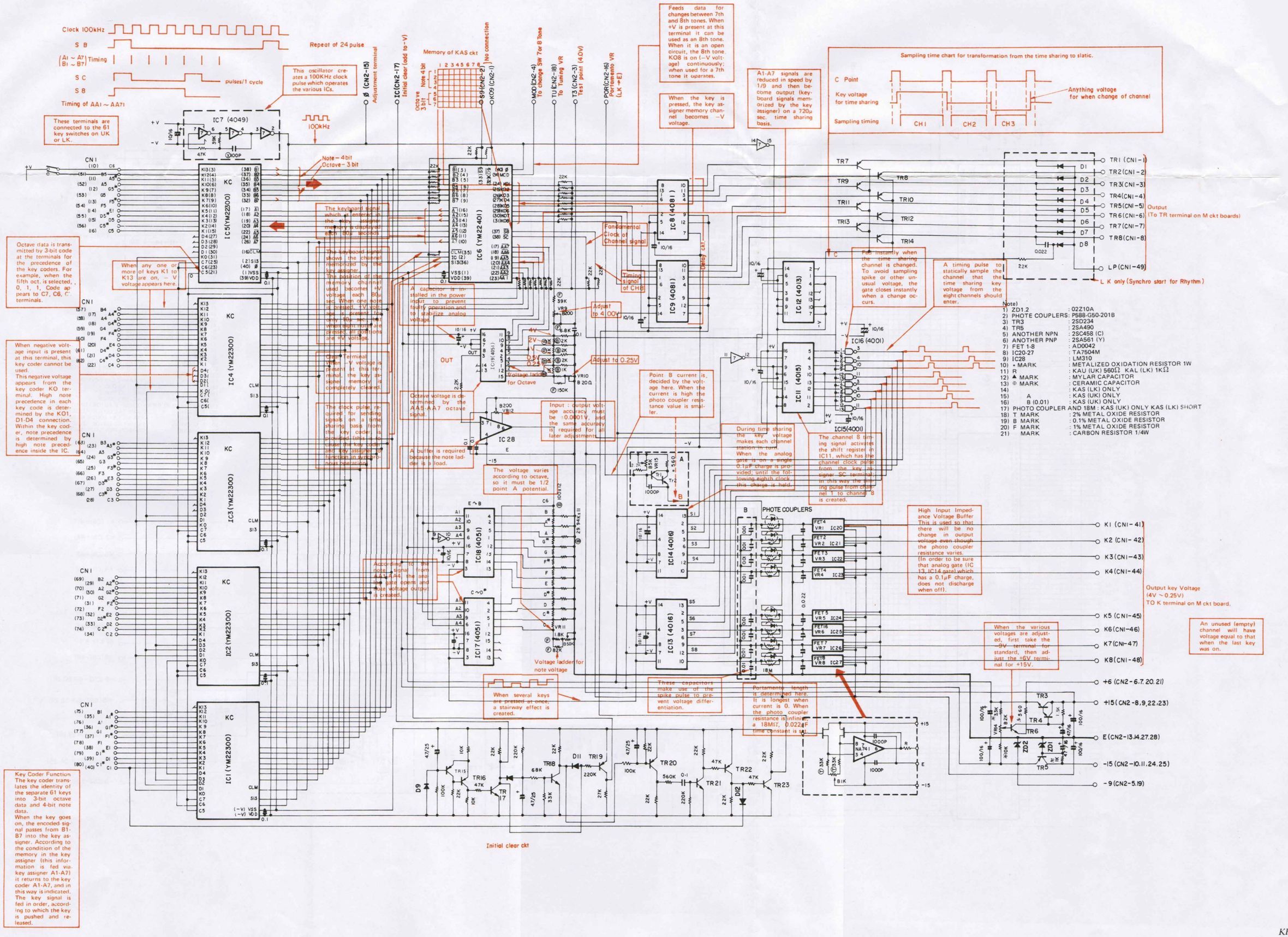

KAS Circuit Board, Adjustment

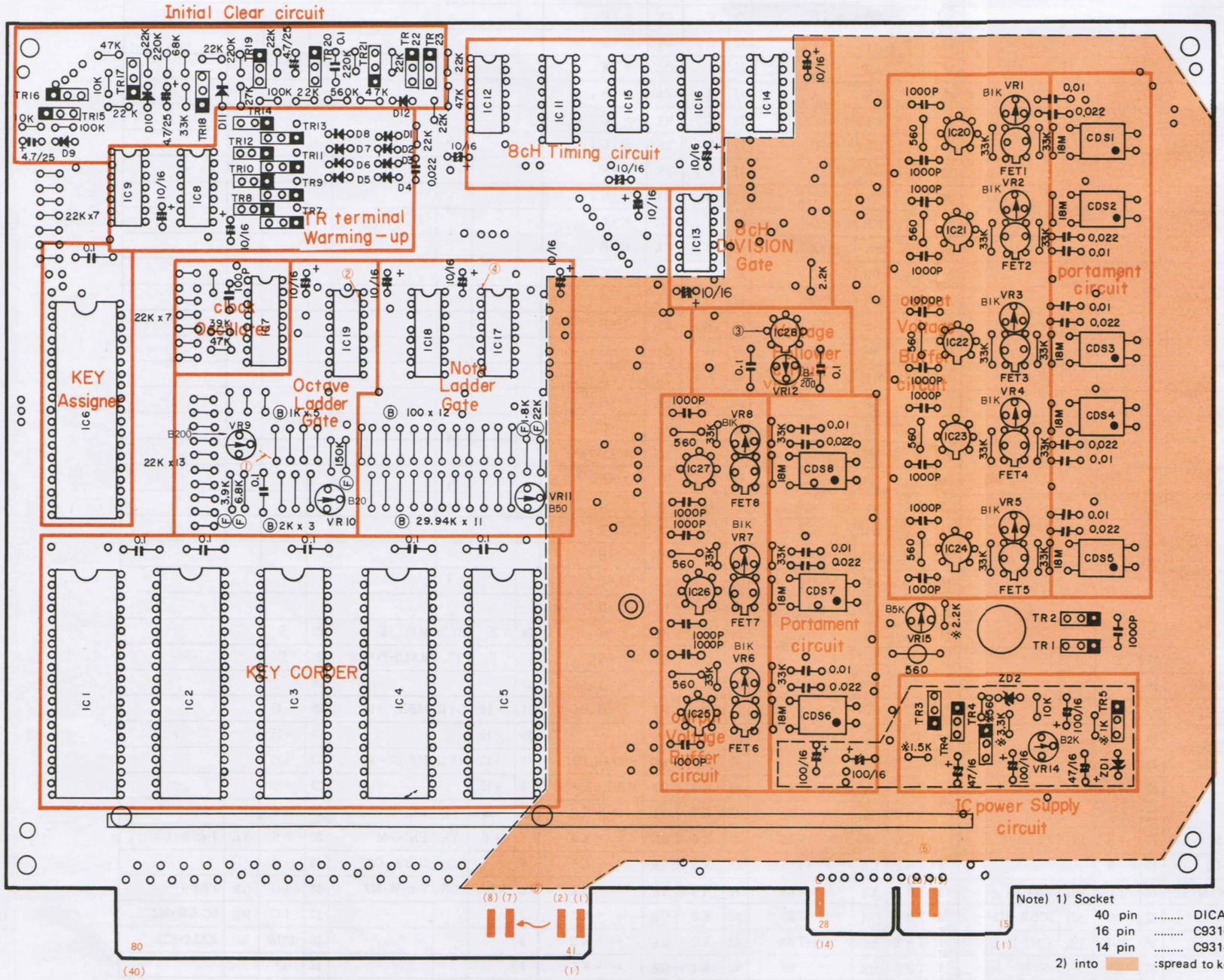

Adjustment Procedures

Preparation

Attach the 28-pin and 80-pin connectors, then turn on the power switch.

Note: Important: Do not depress any key after turning on the power switch.

1. **IC power source voltage adjustment --VR14**
   Ascertain that the -9V terminals (5, 19) do in fact have -9 ± 1V, then adjust the IC power source ⑥ between the +V (20) and −V (19) terminals for |15.0V| at VR14.
2. **Octave network and voltage follower adjustment**
   Note: Set the tuning control at center.
   5. (C_5 ~ C_6 KEY).....4.000V VR9
   Adjust for 4.000V between pattern ① and E terminal.
   4. (C_4 ~ B_4 KEY).....2.000V
   3. (C_3 ~ B_3 KEY) 1.000V
   2. (C_2 ~ B_2 KEY).....0.500V
   1. (C_1 ~ B_1 KEY).....0.250V VR10
   Adjust for 0.250V at pin 15 ② of IC19.
3. **Voltage follower adjustment -- VR12**
   Adjust for even input and output of octave 1 (keys C1-B1). Turn key C1 on once and adjust VR12 so that 0.250V is present at pin 6 ③ of IC28.
4. **Note Ladder network final stage adjustment --VR11**
   Adjust VR11 so that 0.125V is present at pin 1 ④ of IC17.
5. **Output voltage buffer adjustment --VR1 ~ 8**
   Adjust for 0.125V at the 80-pin connector ⑤.
   1 pin.....VR1
   2 pin.....VR2
   ⋮ ⋮
   7 pin.....VR7
   8 pin.....VR8
   } Set to 0.125V
6. **Portamento circuit adjustment --VR15**
   Adjust portamento time change in relation to lever position.

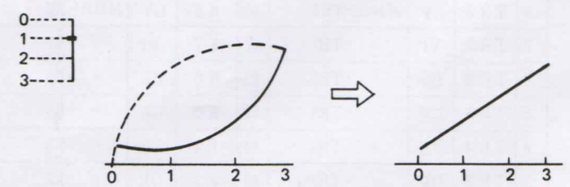

KAS Circuit Board Wiring

KAU1 (CN−1)

No.	Terminal	Color of wire	Direction	No.	Terminal	Color of wire	Direction
40	C_1	BR	UK2-C_1	80	$C^{\#}_1$	RE	UK2-$C^{\#}_1$
39	D_1	OR	〃-D_1	79	$D^{\#}_1$	YE	〃-$D^{\#}_1$
38	E_1	GR	〃-E_1	78	F_1	BE	〃-F_1
37	$F^{\#}_1$	VI	〃-$F^{\#}_1$	77	G_1	GY	〃-G_1
36	$G^{\#}_1$	WH	〃-$G^{\#}_1$	76	A_1	GG	〃-A_1
35	$A^{\#}_1$	SB	〃-$A^{\#}_1$	75	B_1	PK	〃-B_1
34	C_2	BR	〃-C_2	74	$C^{\#}_2$	RE	〃-$C^{\#}_2$
33	D_2	OR	〃-D_2	73	$D^{\#}_2$	YE	〃-$D^{\#}_2$
32	E_2	GR	〃-E_2	72	F_2	BE	〃-F_2
31	$F^{\#}_2$	VI	〃-$F^{\#}_2$	71	G_2	GY	〃-G_2
30	$G^{\#}_2$	WH	〃-$G^{\#}_2$	70	A_2	GG	〃-A_2
29	$A^{\#}_2$	SB	〃-$A^{\#}_2$	69	B_2	PK	〃-B_2
28	C_3	BR	〃-C_3	68	$C^{\#}_3$	RE	〃-$C^{\#}_3$
27	D_3	OR	〃-D_3	67	$D^{\#}_3$	YE	〃-$D^{\#}_3$
26	E_3	GR	〃-E_3	66	F_3	BE	〃-F_3
25	$F^{\#}_3$	VI	〃-$F^{\#}_3$	65	G_3	GY	〃-G_3
24	$G^{\#}_3$	WH	〃-$G^{\#}_3$	64	A_3	GG	〃-A_3
23	$A^{\#}_3$	SB	〃-$A^{\#}_3$	63	B_3	PK	〃-B_3
22	C_4	BR	〃-C_4	62	$C^{\#}_4$	RE	〃-$C^{\#}_4$
21	D_4	OR	〃-D_4	61	$D^{\#}_4$	YE	〃-$D^{\#}_4$
20	E_4	GR	〃-E_4	60	F_4	BE	〃-F_4
19	$F^{\#}_4$	VI	〃-$F^{\#}_4$	59	G_4	GY	〃-G_4
18	$G^{\#}_4$	WH	〃-$G^{\#}_4$	58	A_4	GG	〃-A_4
17	$A^{\#}_4$	SB	〃-$A^{\#}_4$	57	B_4	PK	〃-B_4
16	C_5	BR	〃-C_5	56	$C^{\#}_5$	RE	〃-$C^{\#}_5$
15	D_5	OR	〃-D_5	55	$D^{\#}_5$	YE	〃-$D^{\#}_5$
14	E_5	GR	〃-E_5	54	F_5	BE	〃-F_5
13	$F^{\#}_5$	VI	〃-$F^{\#}_5$	53	G_5	GY	〃-G_5
12	$G^{\#}_5$	WH	〃-$G^{\#}_5$	52	A_5	GG	〃-A_5
11	$A^{\#}_5$	SB	〃-$A^{\#}_5$	51	B_5	PK	〃-B_5
10	C_6	BR	〃-C_6	50			
9				49	LP		
8	TR8	GY	MB1U-TR8	48	K8	GY	MB1U-K8
7	TR7	VI	〃-TR7	47	K7	VI	〃-K7
6	TR6	BE	〃-TR6	46	K6	BE	〃-K6
5	TR5	GR	〃-TR5	45	K5	GR	〃-K5
4	TR4	YE	〃-TR4	44	K4	YE	〃-K4
3	TR3	OR	〃-TR3	43	K3	OR	〃-K3
2	TR2	RE	〃-TR2	42	K2	RE	〃-K2
1	TR1	BR	〃-TR1	41	K1	BR	〃-K1

KAU2 (CN−2)

No.	Terminal	Color of wire	Direction	No.	Terminal	Color of wire	Direction
14	E	BL30	MB1U-E	28	E		
13	E			27	E		
12				26			
11	−15	GY12	MB1U-−15	25	−15		
10	−15			24	−15		
9	+15	RE12	MB1U-+15	23	+15		
8	+15			22	+15		
7	+6	YE	UK1-M	21	+6		
6	+6	YE	PN1-4-M	20	+6	BR	7·8SW-C1
5	−9	WH	ICSW-C1	19	−9		
4	MOD	RE	7·8SW-M1	18	TU	RE	PN8·2
3				17	IC	SB	ICSW-M1
2				16	POR	BR	PN7-11-C
1				15	∅		

KAL1

No.	Terminal	Color of Wire	Direction	No.	Terminal	Color of Wire	Direction
40	C_1	BR	UK1-C_1	80	$C^{\#}_1$	RE	UK1-$C^{\#}_1$
39	D_1	OR	〃-D_1	79	$D^{\#}_1$	YE	〃-$D^{\#}_1$
38	E_1	GR	〃-E_1	78	F_1	BE	〃-F_1
37	$F^{\#}_1$	VI	〃-$F^{\#}_1$	77	G_1	GY	〃-G_1
36	$G^{\#}_1$	WH	〃-$G^{\#}_1$	76	A_1	GG	〃-A_1
35	$A^{\#}_1$	SB	〃-$A^{\#}_1$	75	B_1	PK	〃-B_1
34	C_2	BR	〃-C_2	74	$C^{\#}_2$	RE	〃-$C^{\#}_2$
33	D_2	OR	〃-D_2	73	$D^{\#}_2$	YE	〃-$D^{\#}_2$
32	E_2	GR	〃-E_2	72	F_2	BE	〃-F_2
31	$F^{\#}_2$	VI	〃-$F^{\#}_2$	71	G_2	GY	〃-G_2
30	$G^{\#}_2$	WH	〃-$G^{\#}_2$	70	A_2	GG	〃-A_2
29	$A^{\#}_2$	SB	〃-$A^{\#}_2$	69	B_2	PK	〃-B_2
28	C_3	BR	〃-C_3	68	$C^{\#}_3$	RE	〃-$C^{\#}_3$
27	D_3	OR	〃-D_3	67	$D^{\#}_3$	YE	〃-$D^{\#}_3$
26	E_3	GR	〃-E_3	66	F_3	BE	〃-F_3
25	$F^{\#}_3$	VI	〃-$F^{\#}_3$	65	G_3	GY	〃-G_3
24	$G^{\#}_3$	WH	〃-$G^{\#}_3$	64	A_3	GG	〃-A_3
23	$A^{\#}_3$	SB	〃-$A^{\#}_3$	63	B_3	PK	〃-B_3
22	C_4	BR	〃-C_4	62	$C^{\#}_4$	RE	〃-$C^{\#}_4$
21	D_4	OR	〃-D_4	61	$D^{\#}_4$	YE	〃-$D^{\#}_4$
20	E_4	GR	〃-E_4	60	F_4	BE	〃-F_4
19	$F^{\#}_4$	VI	〃-$F^{\#}_4$	59	G_4	GY	〃-G_4
18	$G^{\#}_4$	WH	〃-$G^{\#}_4$	58	A_4	GG	〃-A_4
17	$A^{\#}_4$	SB	〃-$A^{\#}_4$	57	B_4	PK	〃-B_4
16	C_5	BR	〃-C_5	56	$C^{\#}_5$	RE	〃-$C^{\#}_5$
15	D_5	OR	〃-D_5	55	$D^{\#}_5$	YE	〃-$D^{\#}_5$
14	E_5	GR	〃-E_5	54	F_5	BE	〃-F_5
13	$F^{\#}_5$	VI	〃-$F^{\#}_5$	53	G_5	GY	〃-G_5
12	$G^{\#}_5$	WH	〃-$G^{\#}_5$	52	A_5	GG	〃-A_5
11	$A^{\#}_5$	SB	〃-$A^{\#}_5$	51	B_5	PK	〃-B_5
10	C_6	BR	〃-C_6	50			
9				49	LP	WH	RHY1-LP(5)
8	TR8	GY	MBIL-TR8	48	K8	GY	MBIL-K8
7	TR7	VI	〃-TR7	47	K7	VI	〃-K7
6	TR6	BE	〃-TR6	46	K6	BE	〃-K6
5	TR5	GR	〃-TR5	45	K5	GR	〃-K5
4	TR4	YE	〃-TR4	44	K4	YE	〃-K4
3	TR3	OR	〃-TR3	43	K3	OR	〃-K3
2	TR2	RE	〃-TR2	42	K2	RE	〃-K2
1	TR1	BR	〃-TR1	41	K1	BR	〃-K1

KAL2

No.	Terminal	Color of Wire	Direction	No.	Terminal	Color of Wire	Direction
14	E	BL30	MBIL-E	28	E		
13	E	BL	KAL2-POR(16)	27	E		
12				26			
11	−15	GY12	MBIL-−15	25	−15		
10	−15			24	−15		
9	+15	RE12	MBIU-+15	23	+15		
8	+15			22	+15		
7	+6	YE	LK1-M	21	+6		
6	+6	YE	PN1-5-M	20	+6	YE	7·8SW-C2
5	−9	GG	ICSW-C2	19	−9		
4	MOD	GR	7·8SW-M2	18	TU	OR	PN8-3
3				17	IC	PK	IC SW-M2
2				16	POR	BL	KAL2-E(13)
1				15	∅		

Keyboard Circuit Diagram (1)

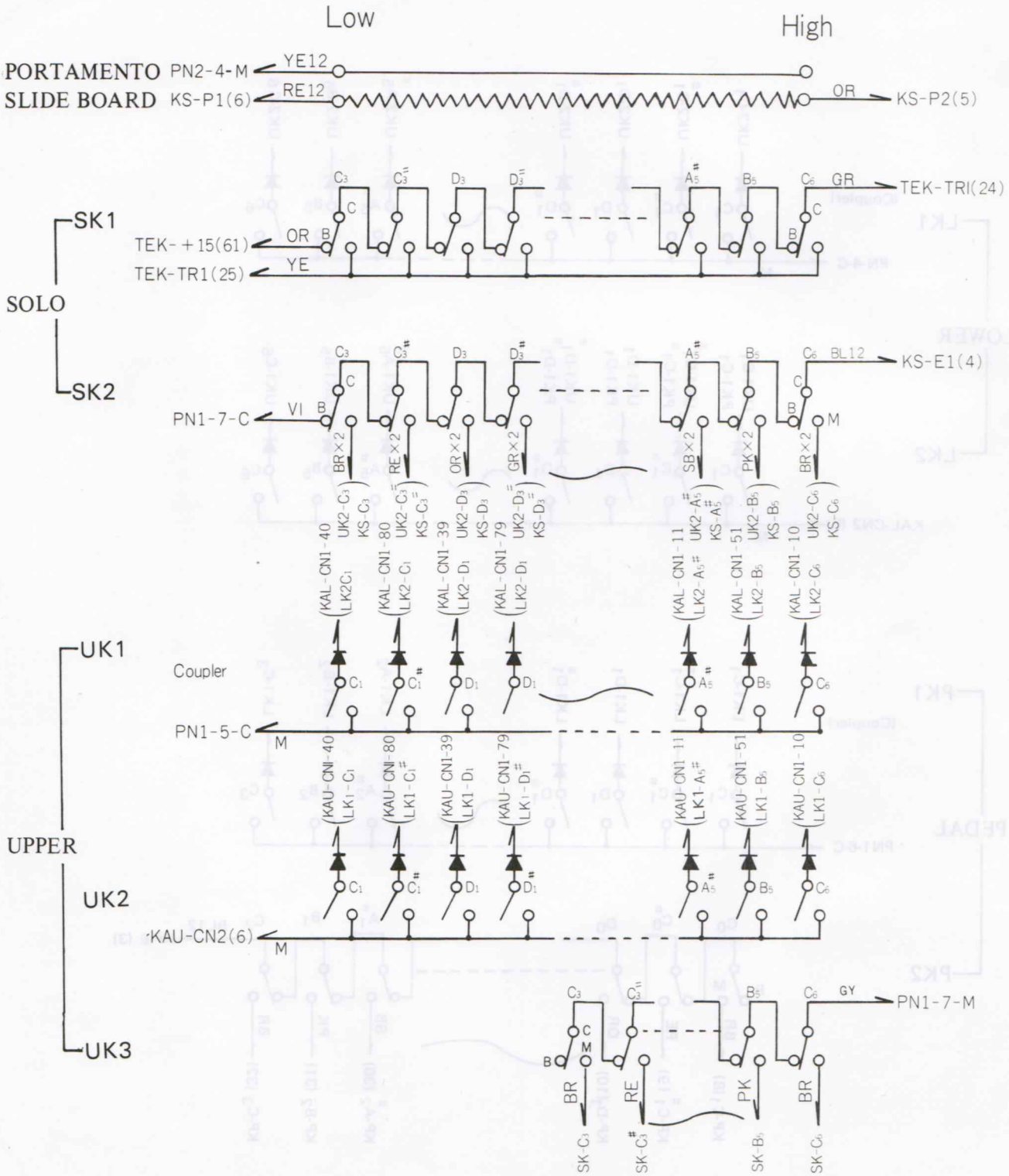

Note) Diode: Silicon Diode

Keyboard Circuit Diagram (2)

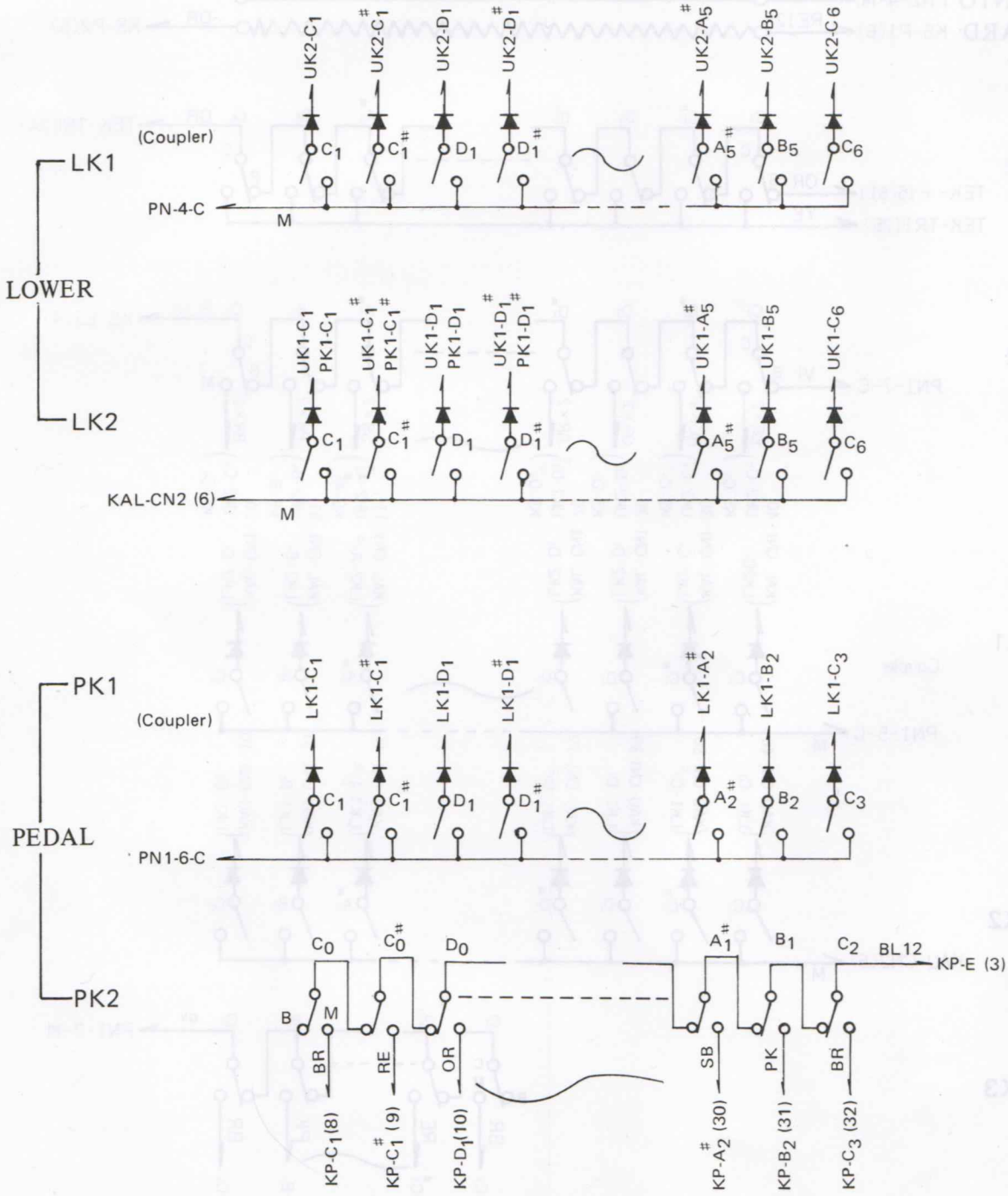

Note) Diode: Silicon Diode

PN 1 (Panel 1) Circuit Diagram (1)

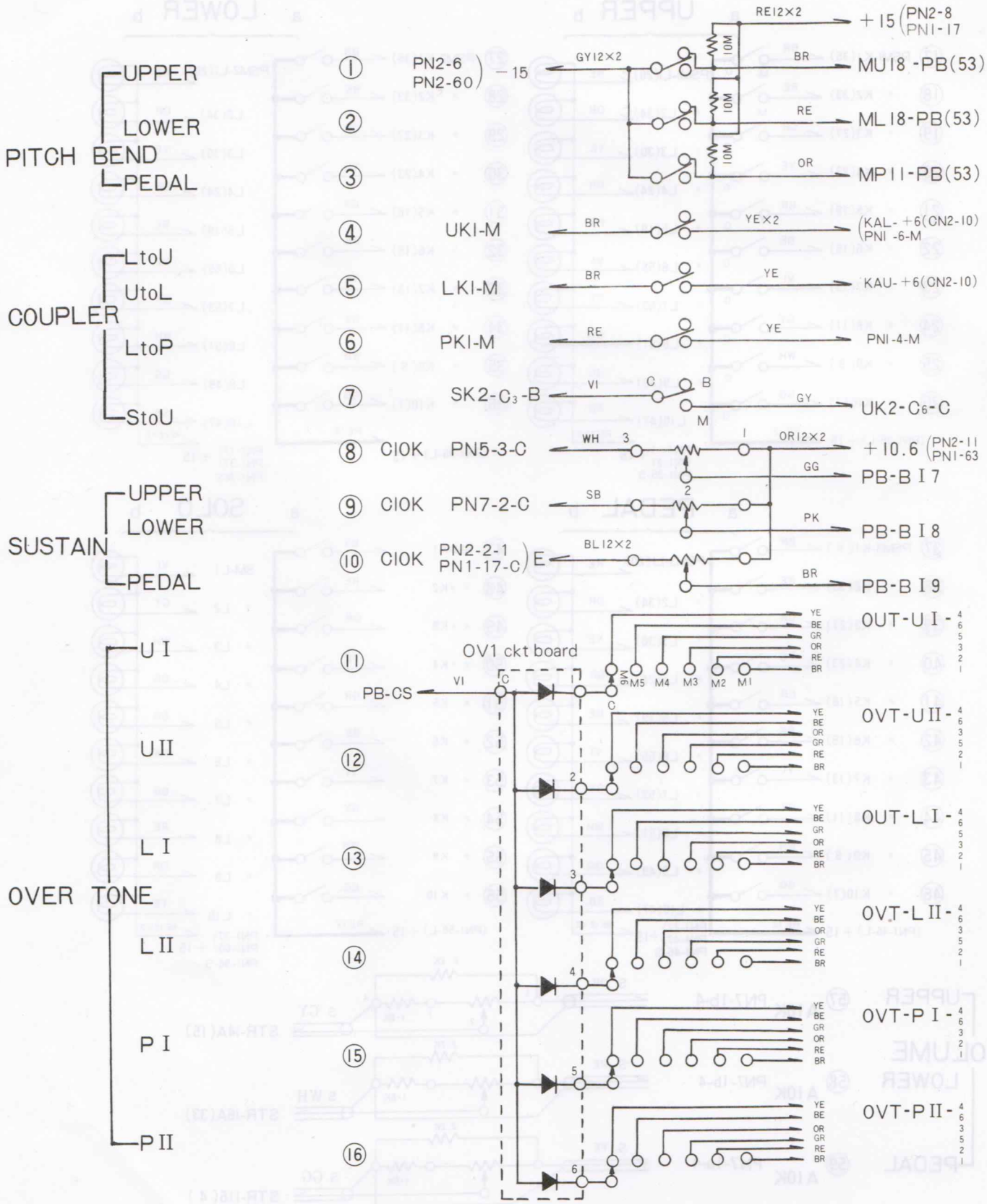

PN 1 (Panel 1) Circuit Diagram (2)

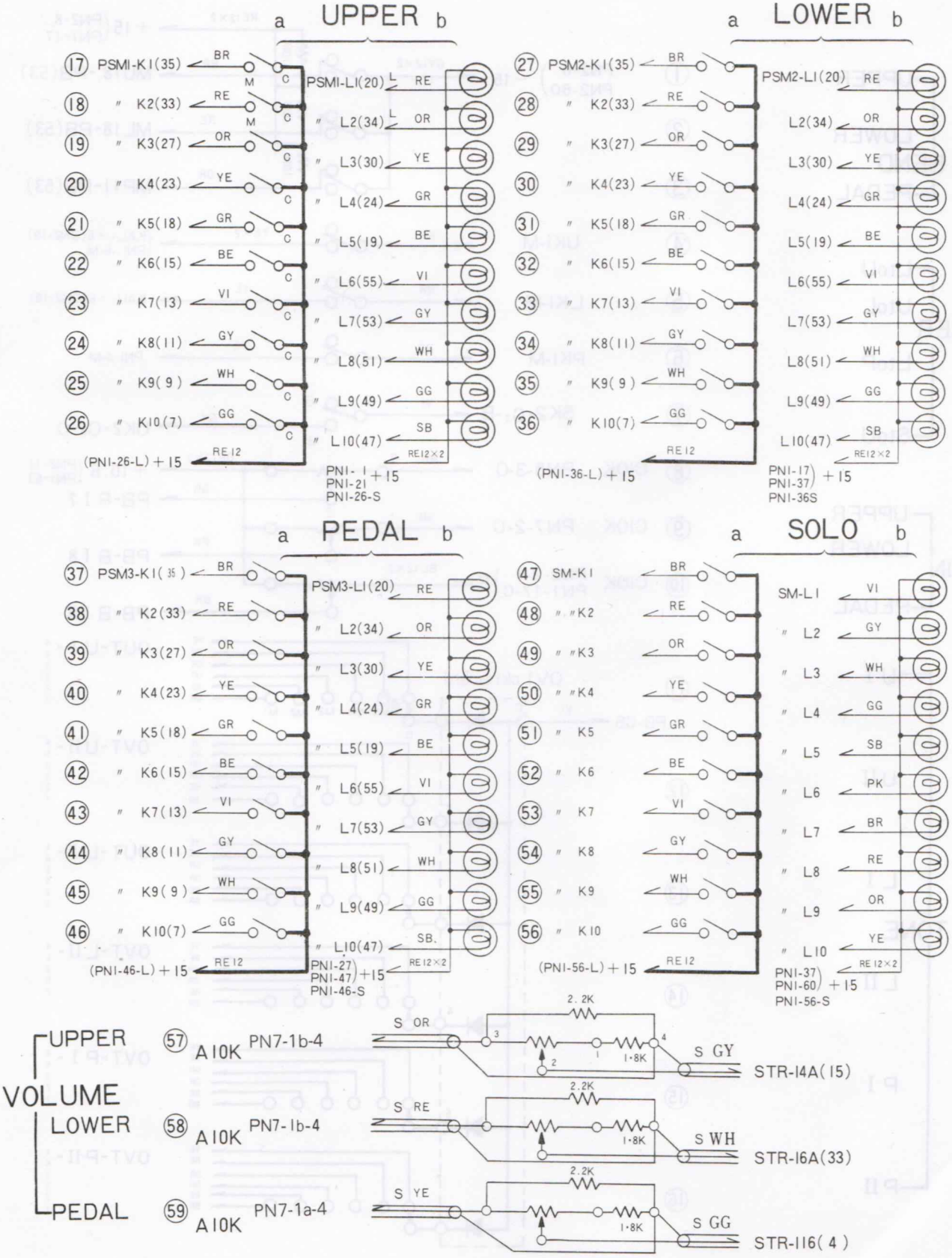

PN 1 (Panel 1) Circuit Diagram (3)

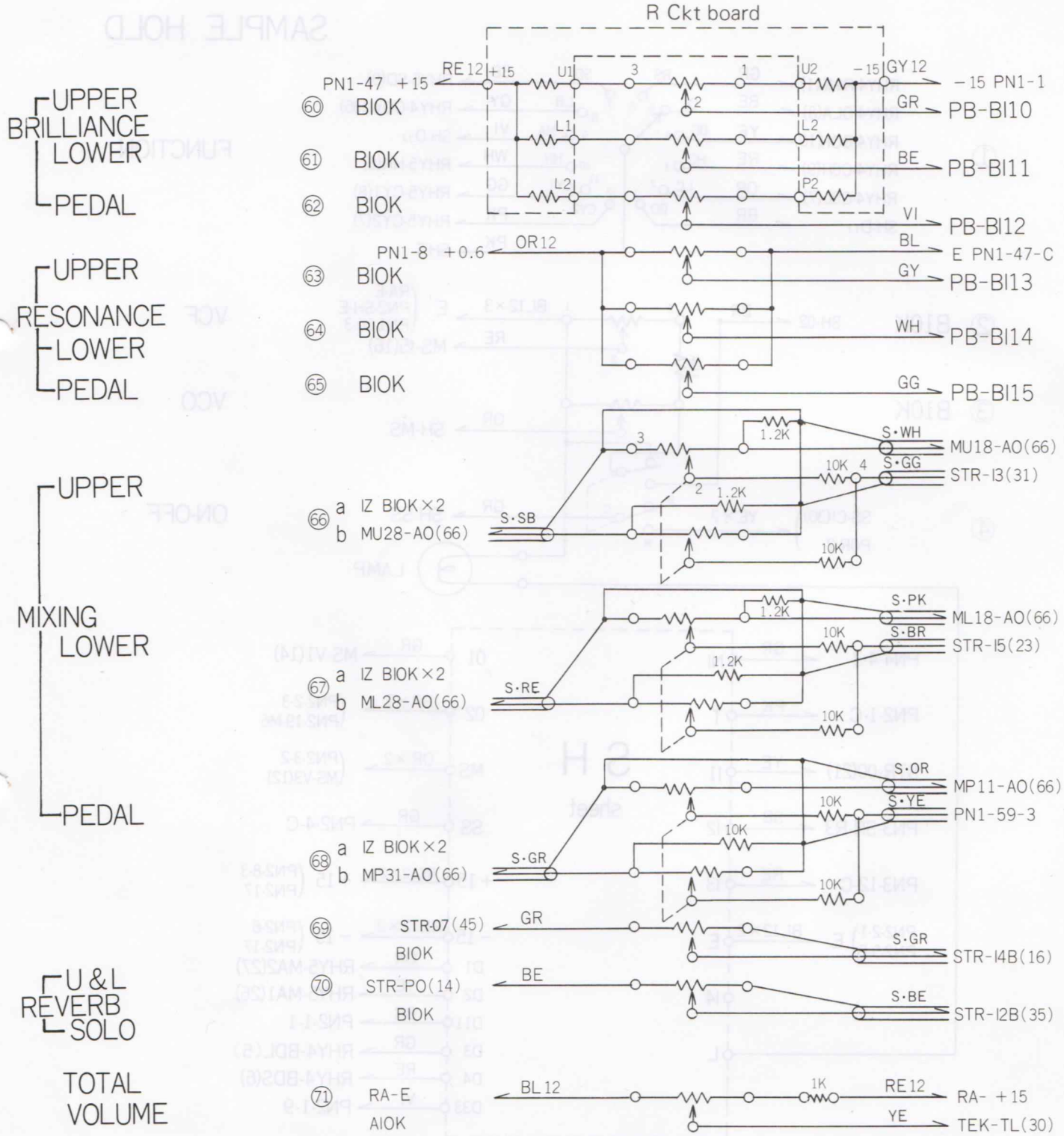

PN 2 (Panel 2) Circuit Diagram (1)

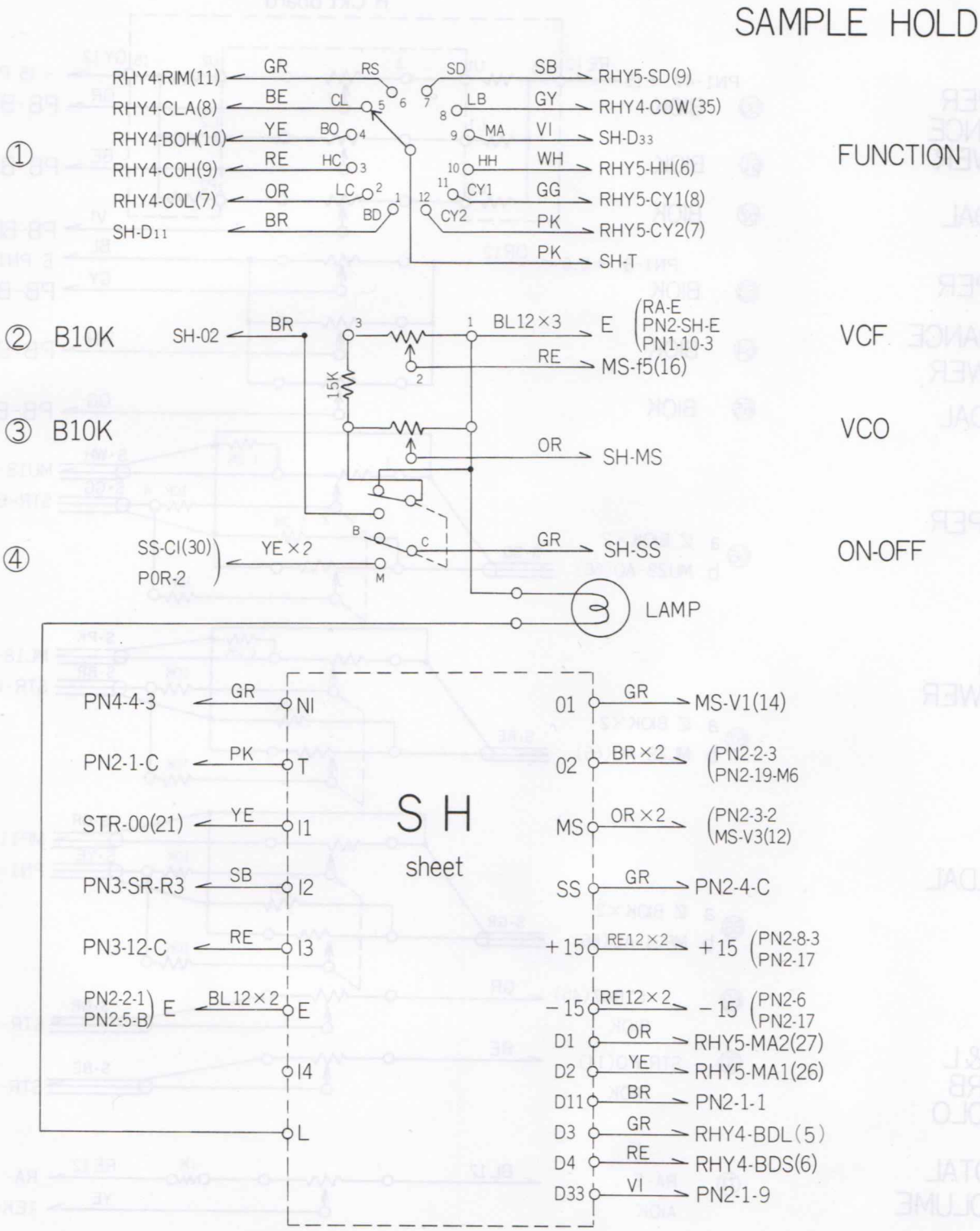

PN 2 (Penel 2) Circuit Diagram (2)

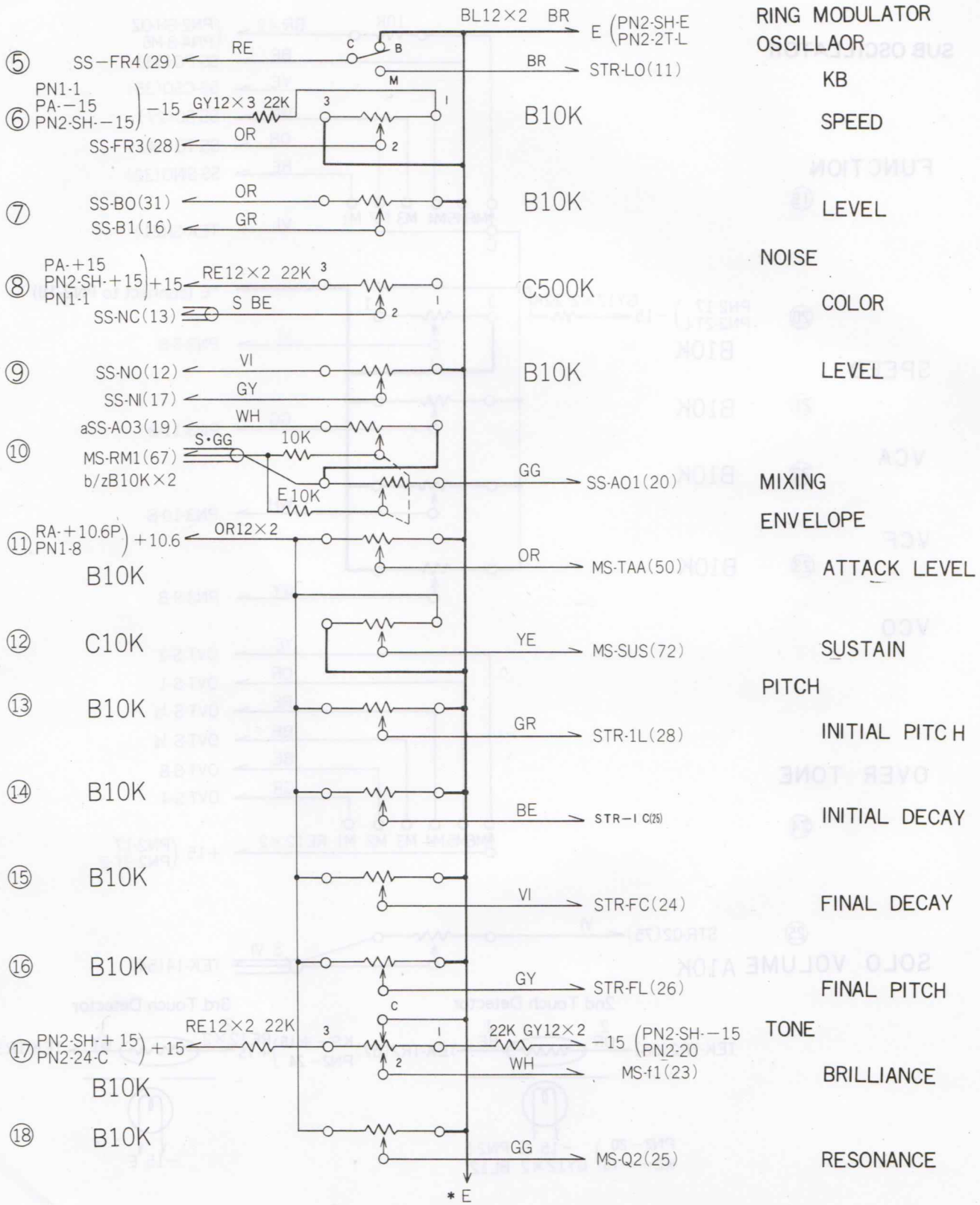

PN 2 (Panel 2, Solo Section) Circuit Diagram (3)

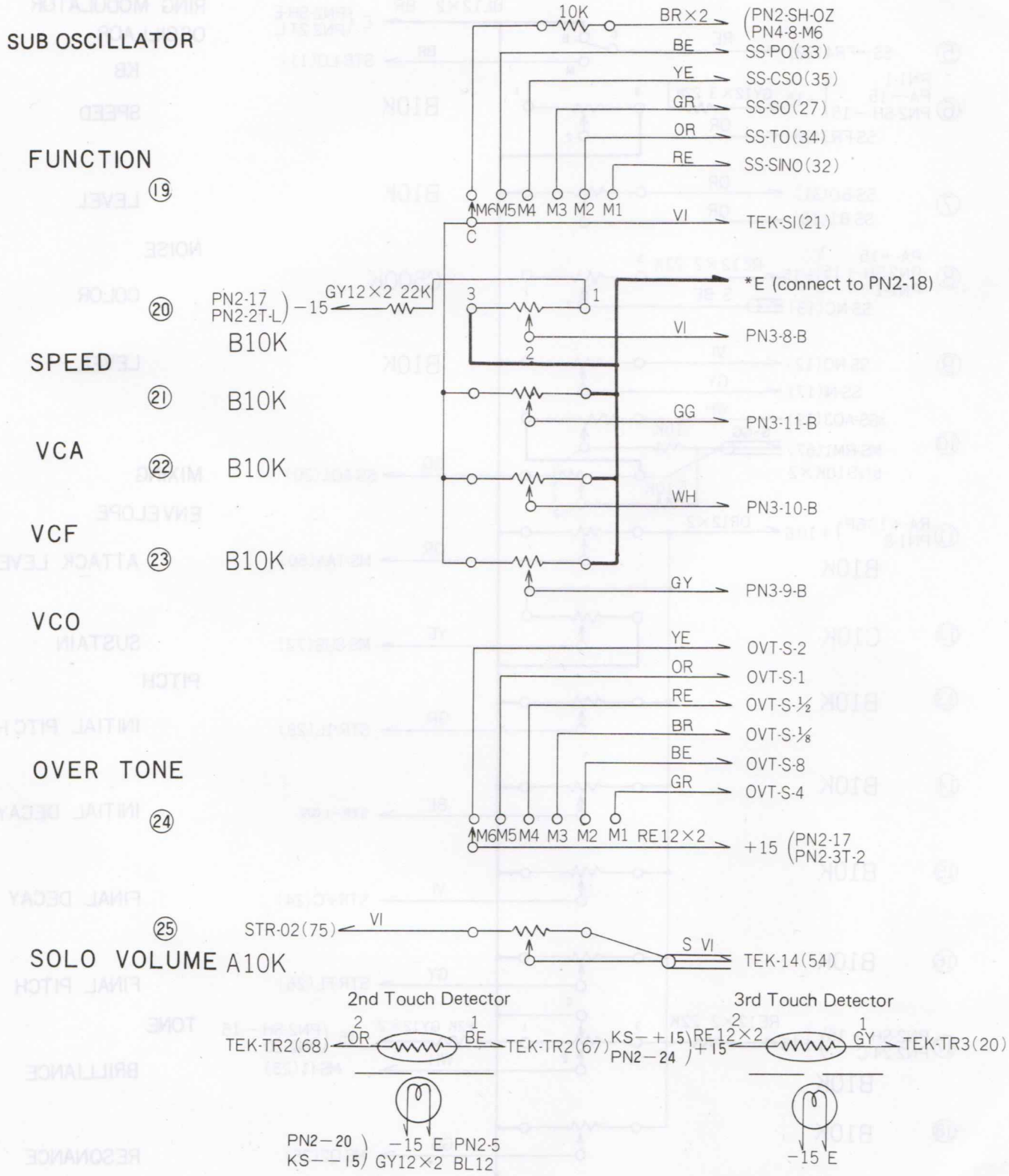

PN 3 (Panel 3, Solo Section) Circuit Diagram

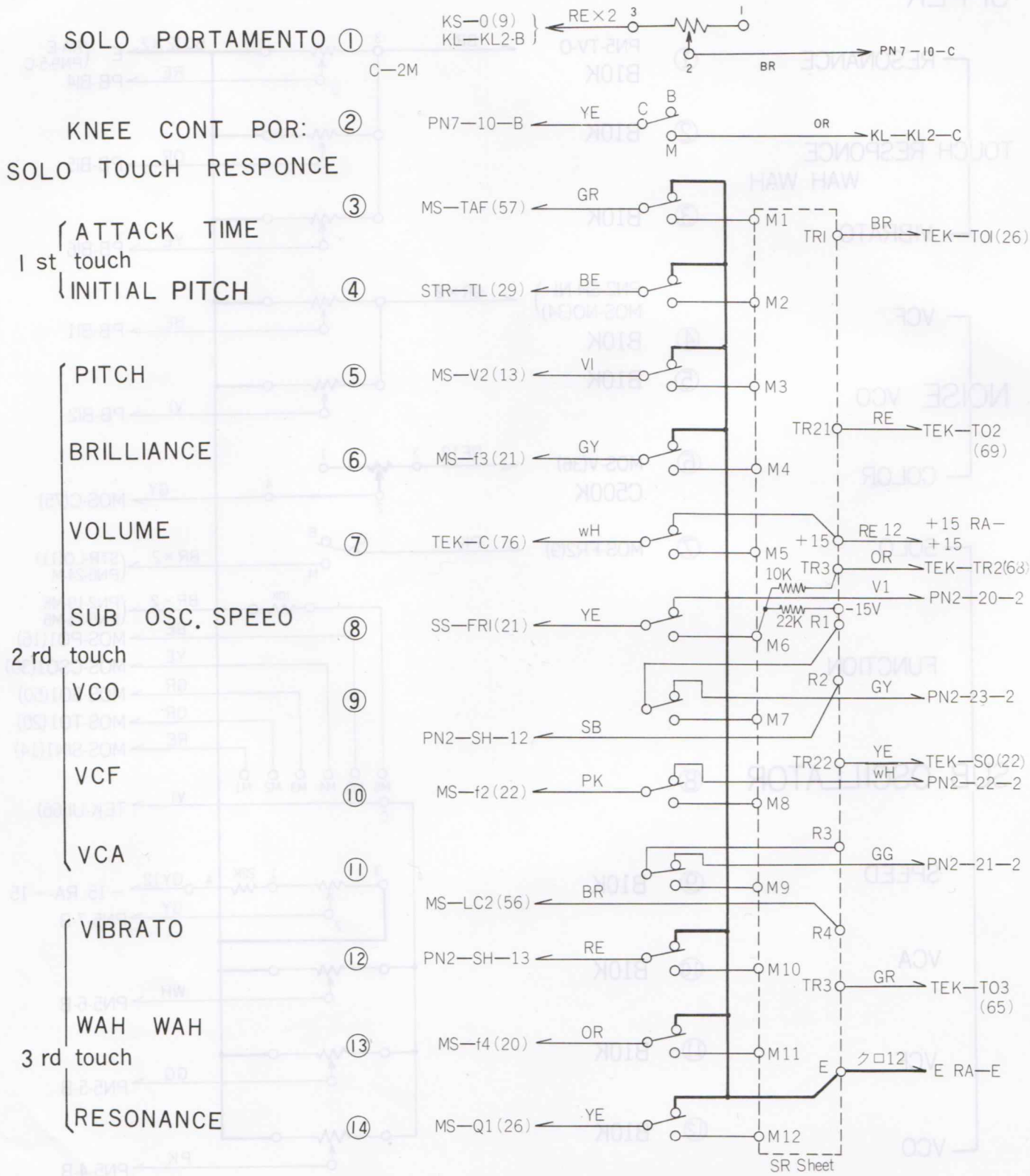

PN 4 (Panel 4, Upper Section) Circuit Diagram

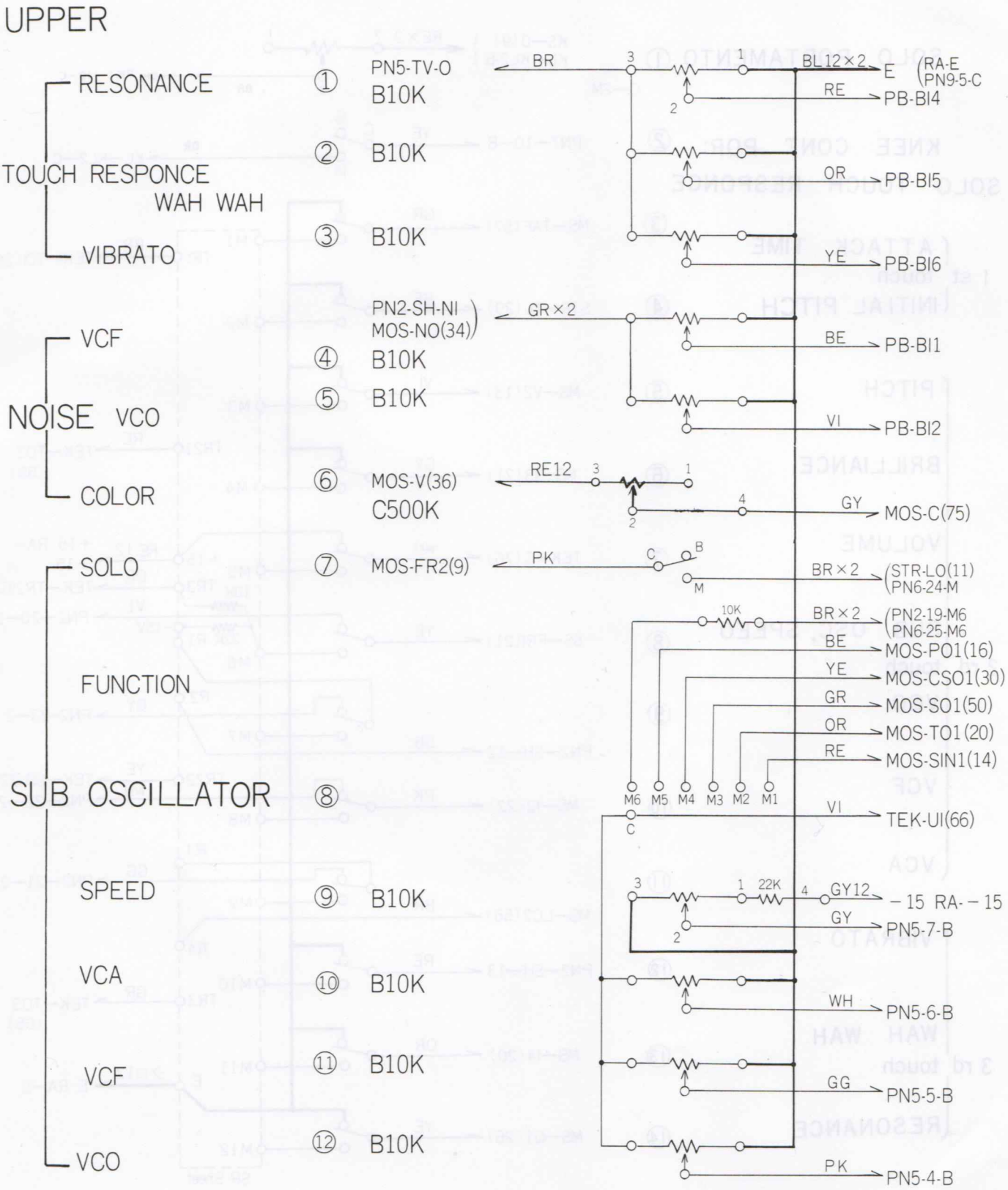

PN 5 (Panel 5, Upper Section) Circuit Diagram (1)

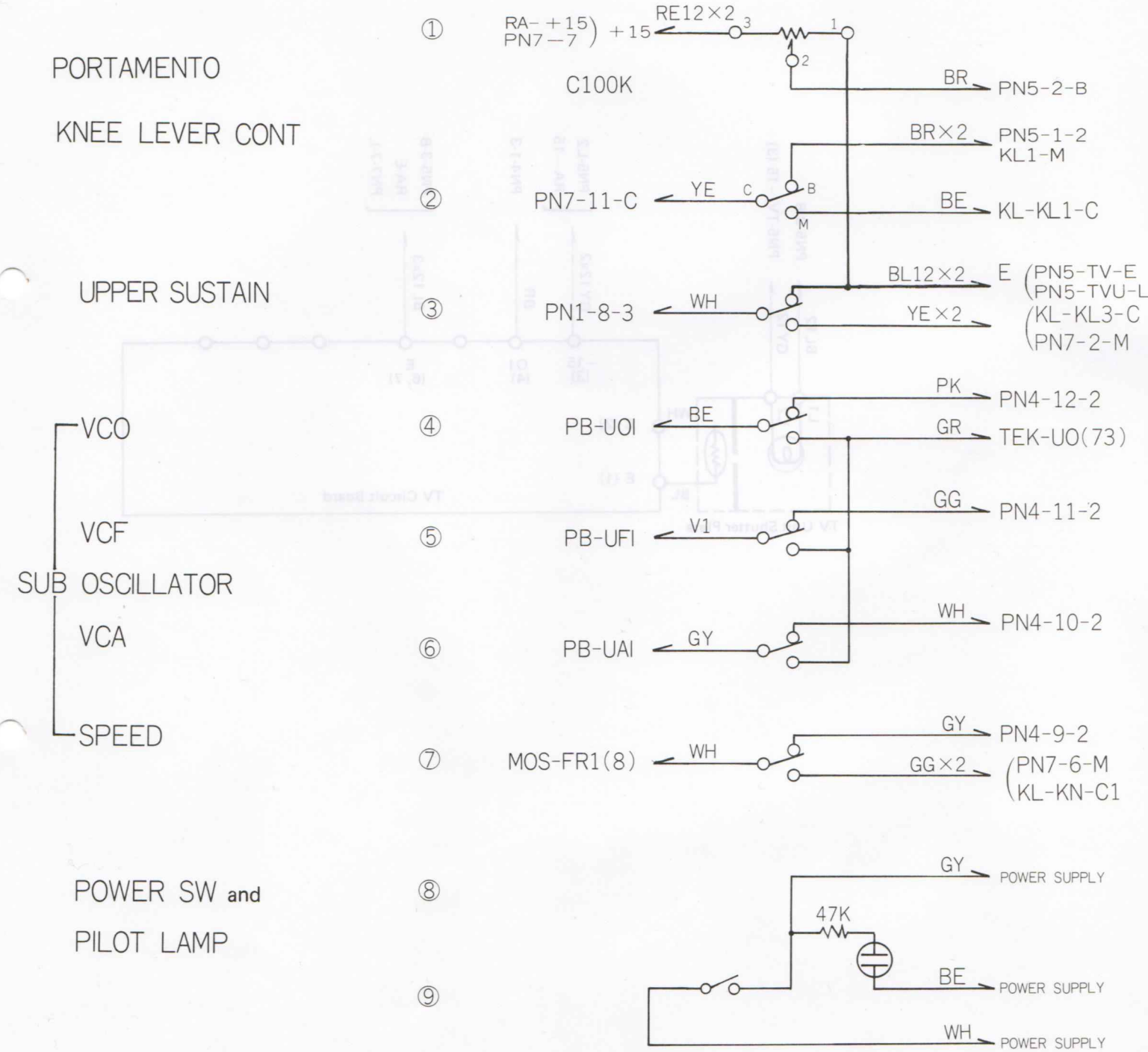

PN 5 (Panel 5) Circuit Diagram (2)

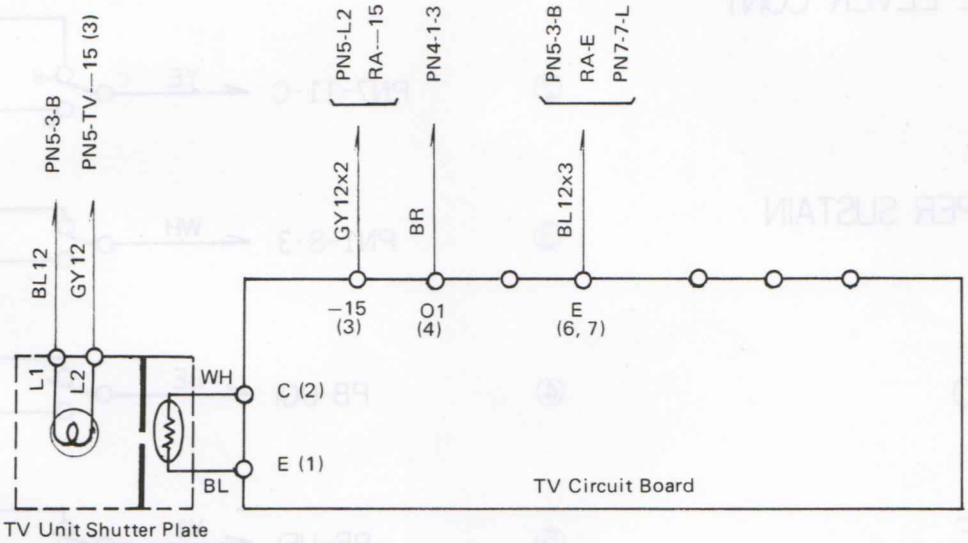

PN 6 (Panel 6, Rhythm Section) Circuit Diagram (1)

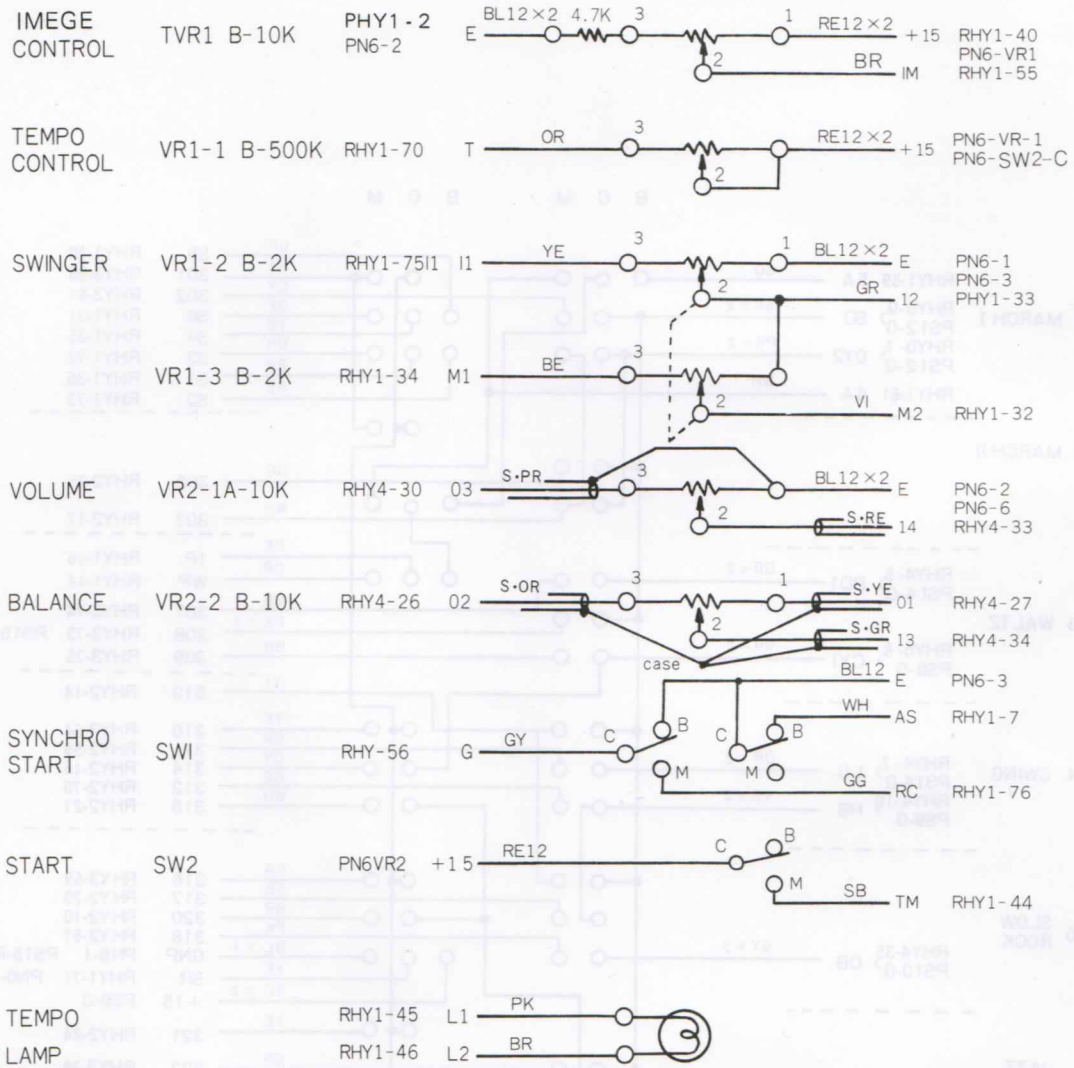

PN 6 (Panel 6) Circuit Diagram (2)

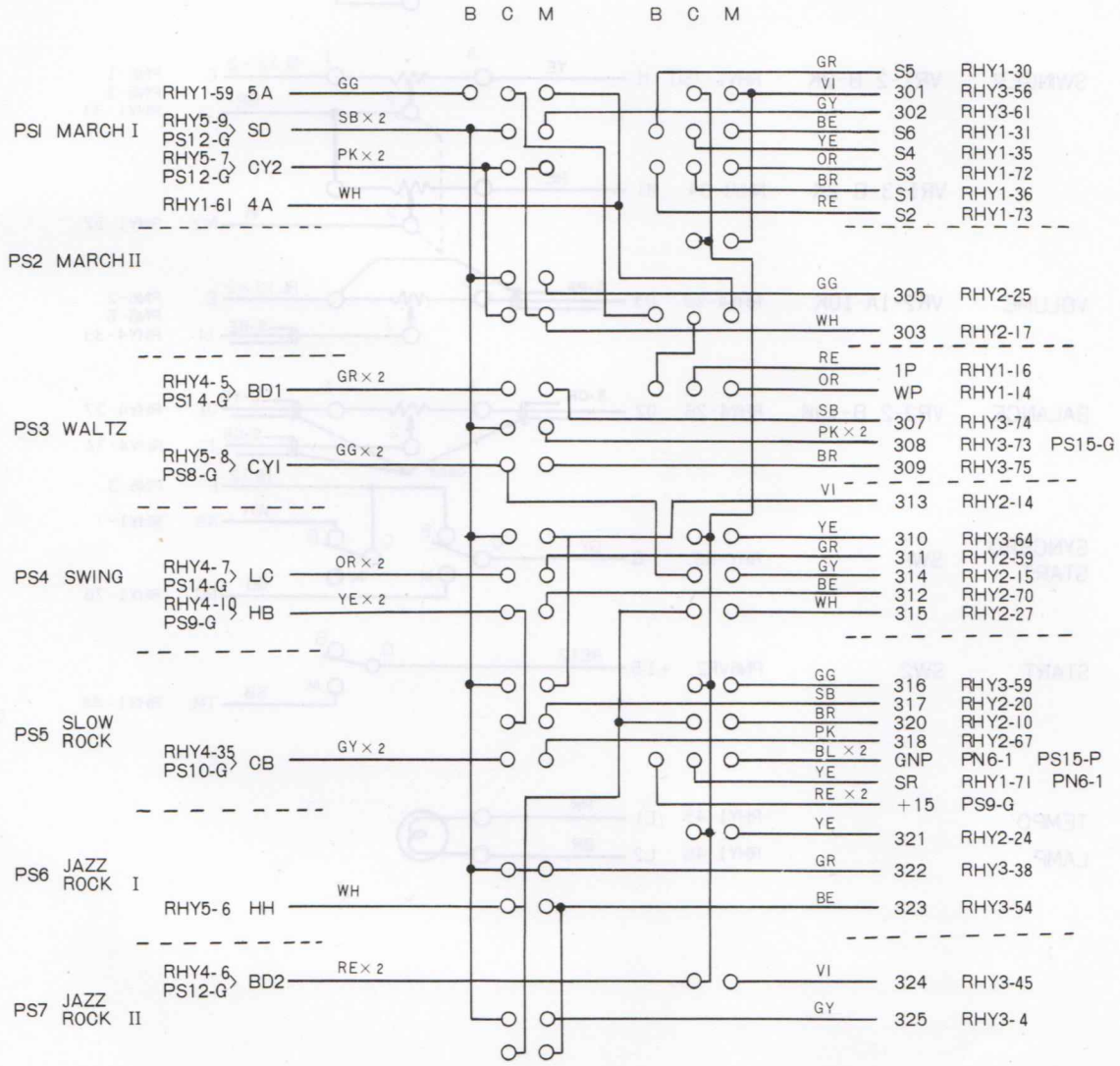

PN 6 (Panel 6, Rhythm Selector switch) Circuit Diagram (3)

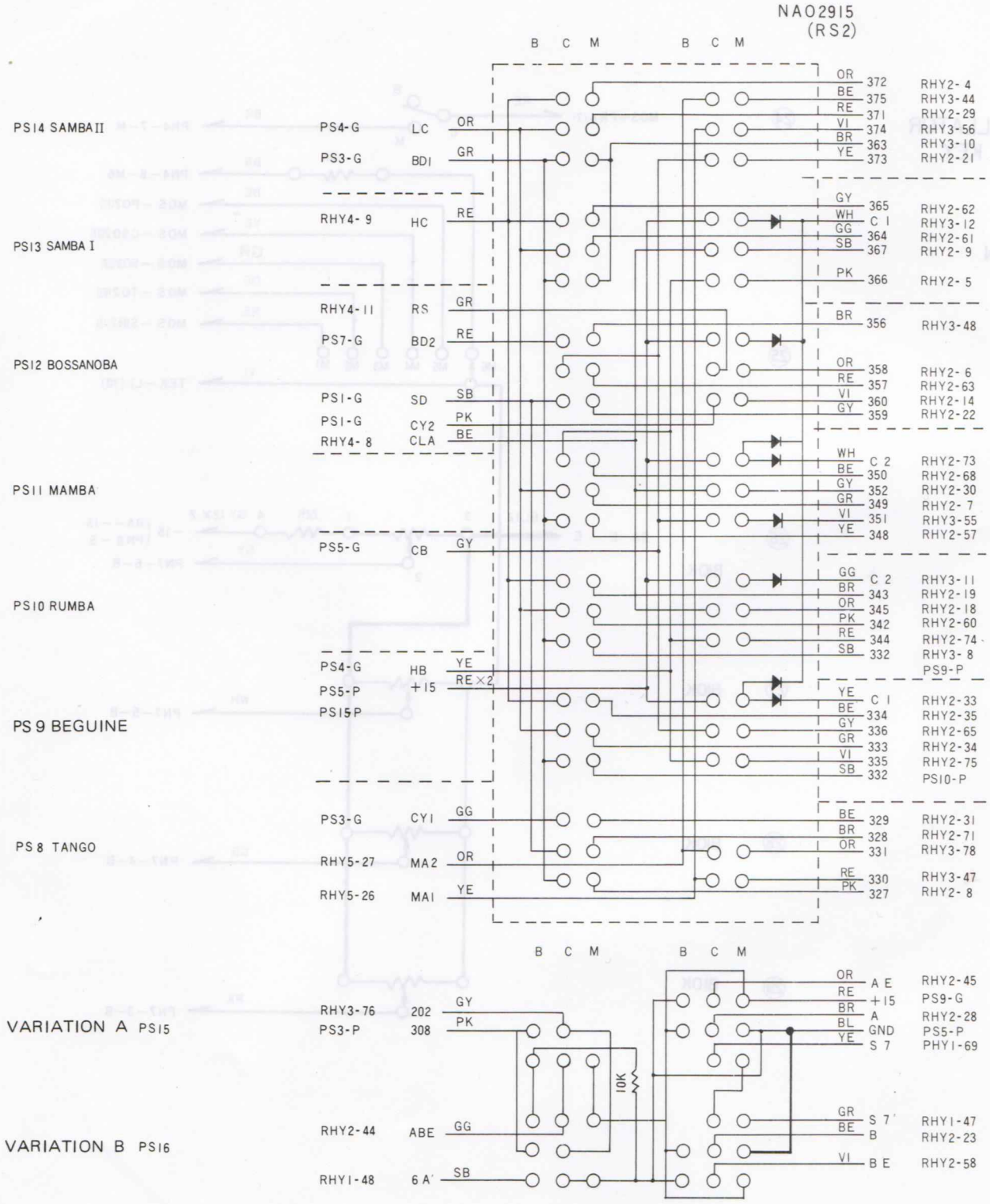

PN 6 (Panel 6, Lower Sub Osc. Section) Circuit Diagram (4)

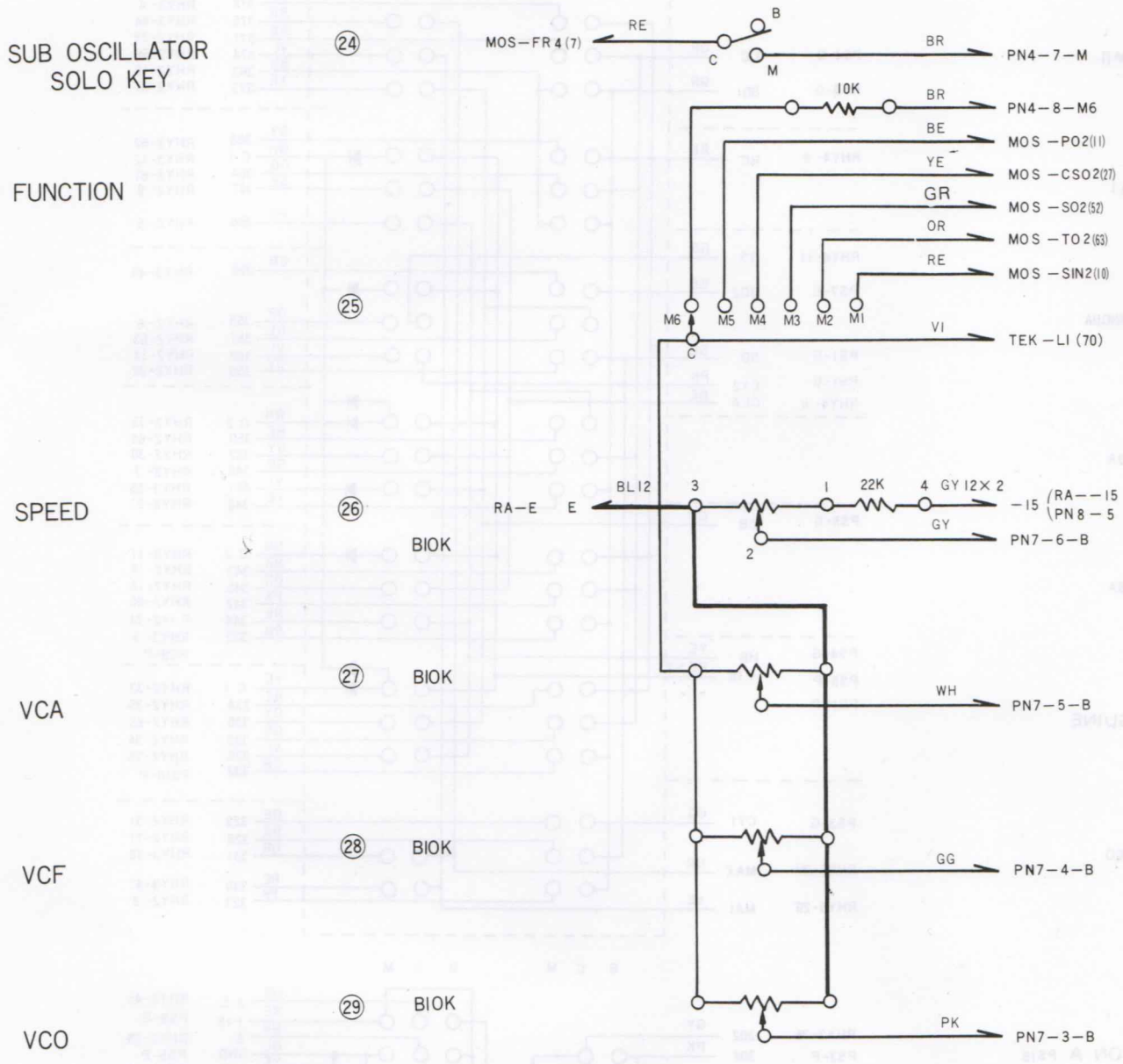

PN 7 (Panel 7) Circuit Diagram

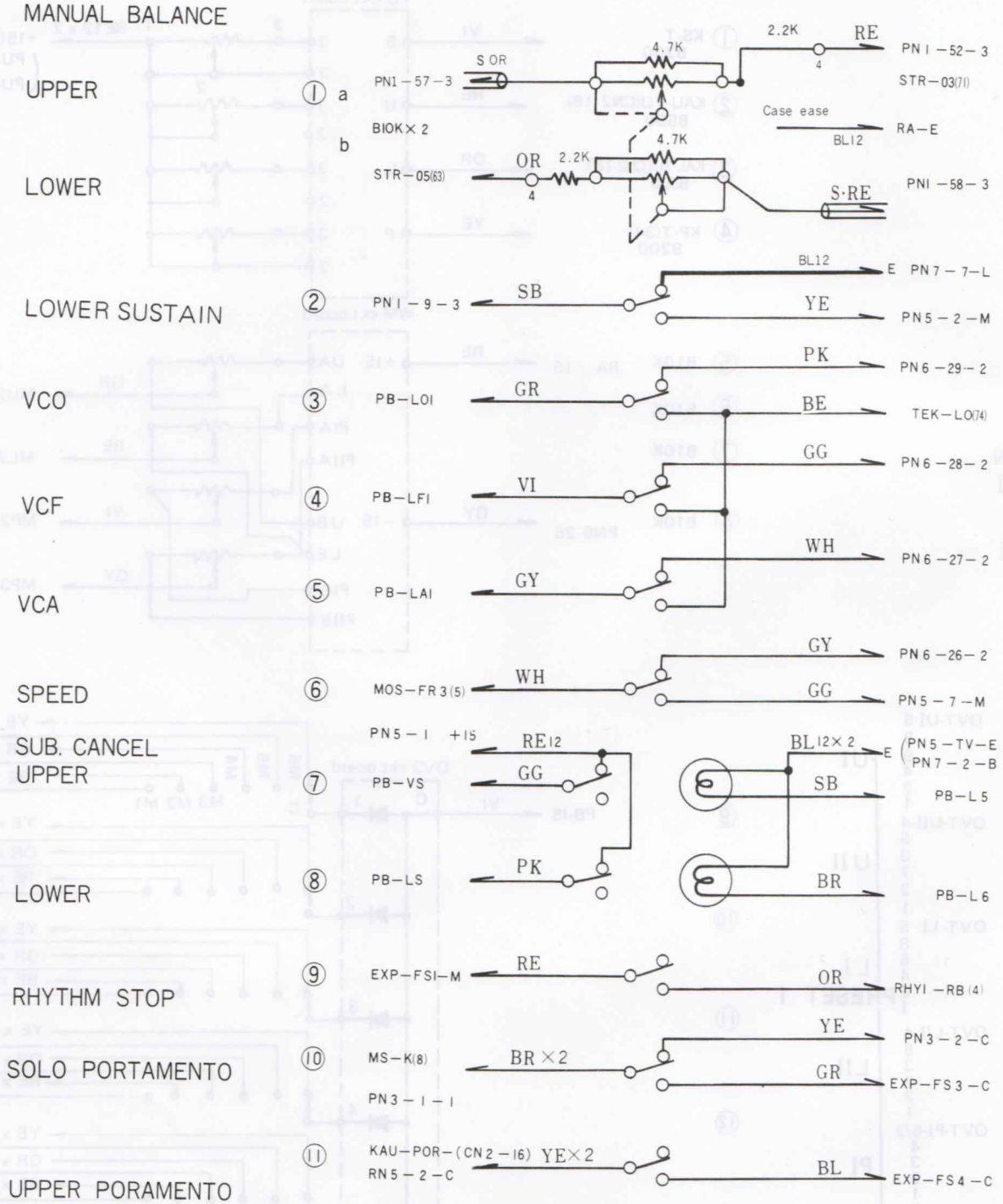

PN 8 (Panel 8, Preset Panel Section) Circuit Diagram (1)

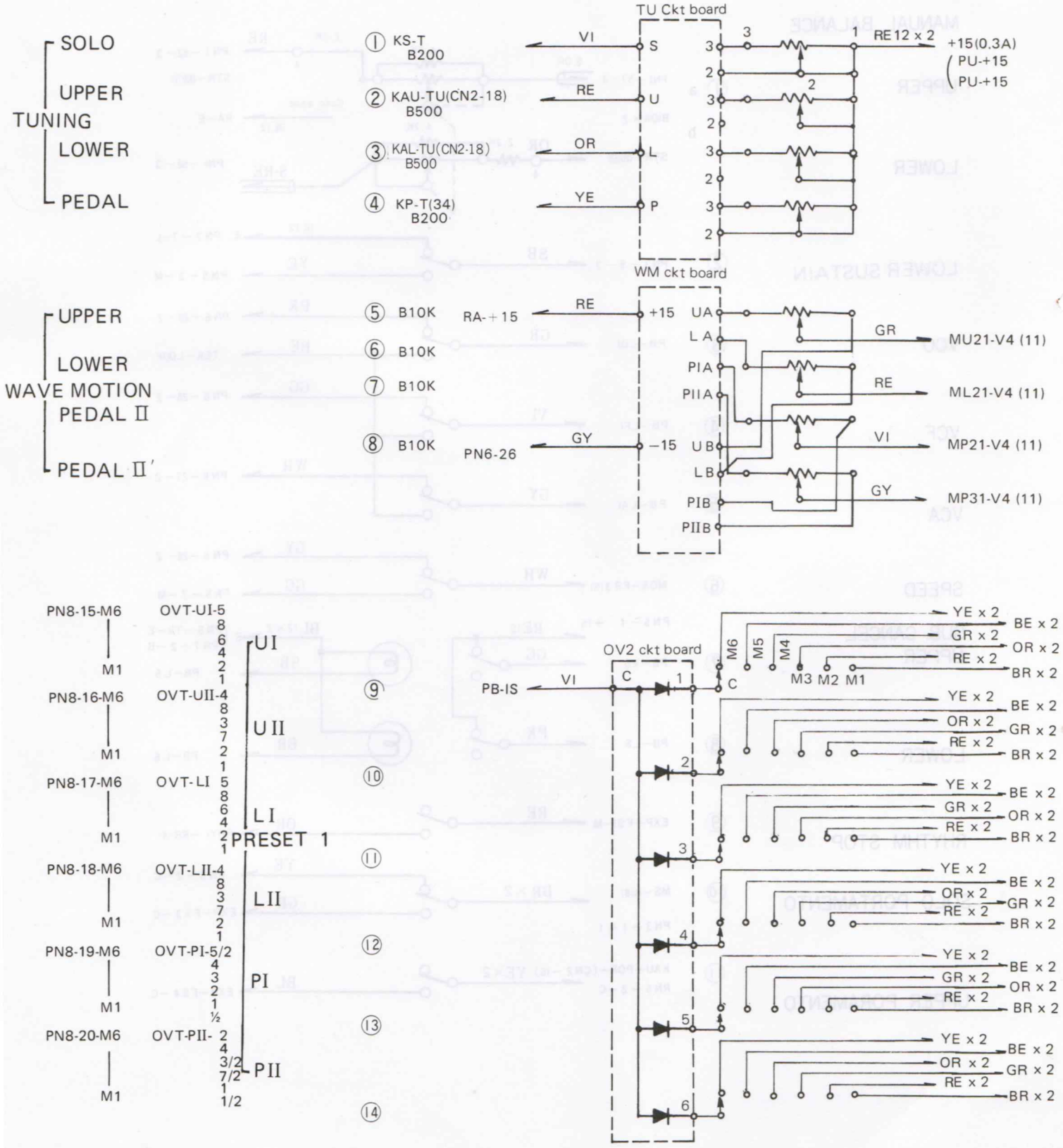

PN 8 (Panel 8, Preset Panel Section) Circuit Diagram (2)

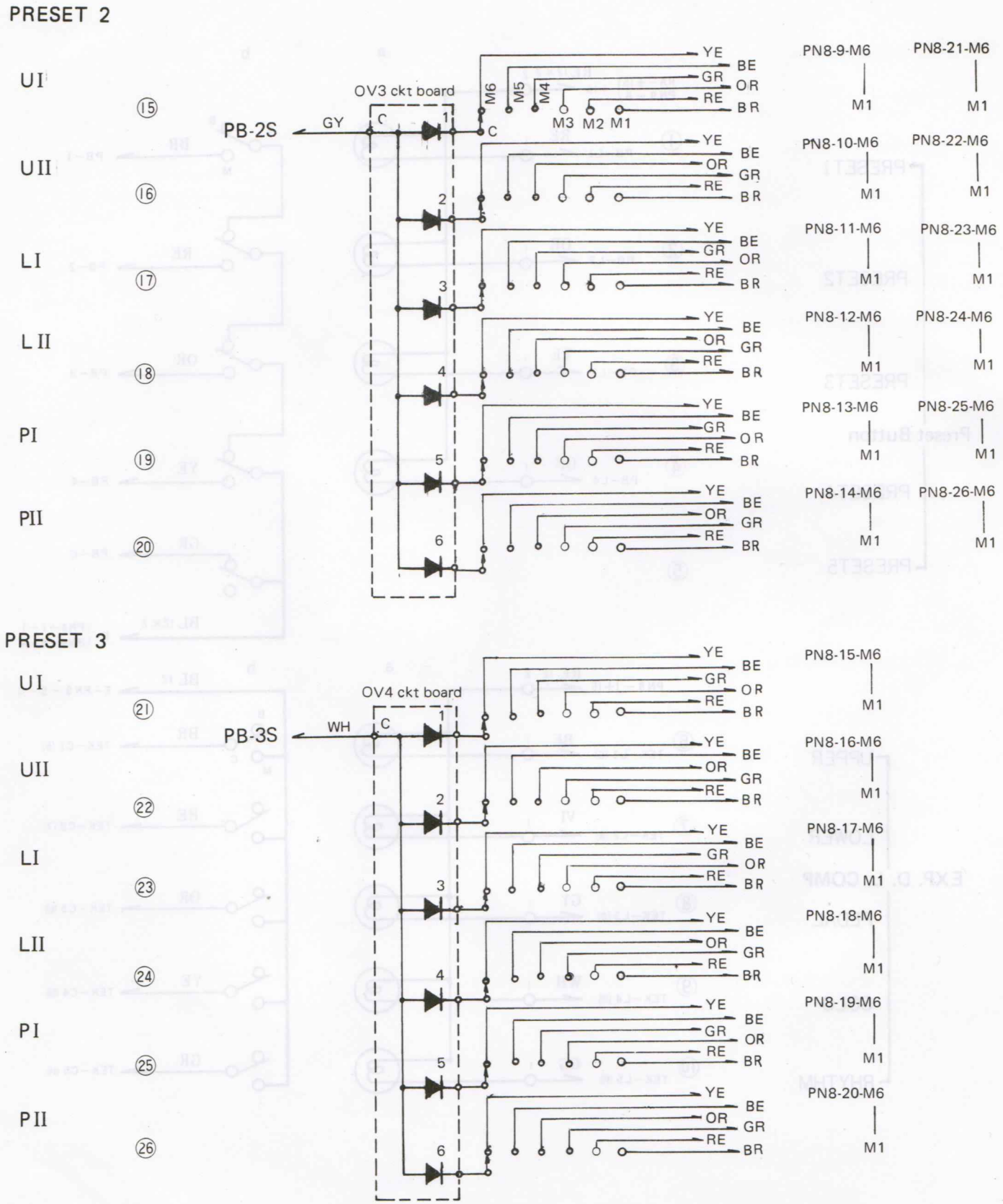

PN 9 (Panel 9, Preset Button and Exp.D.L Compressor Button)

Circuit Diagram

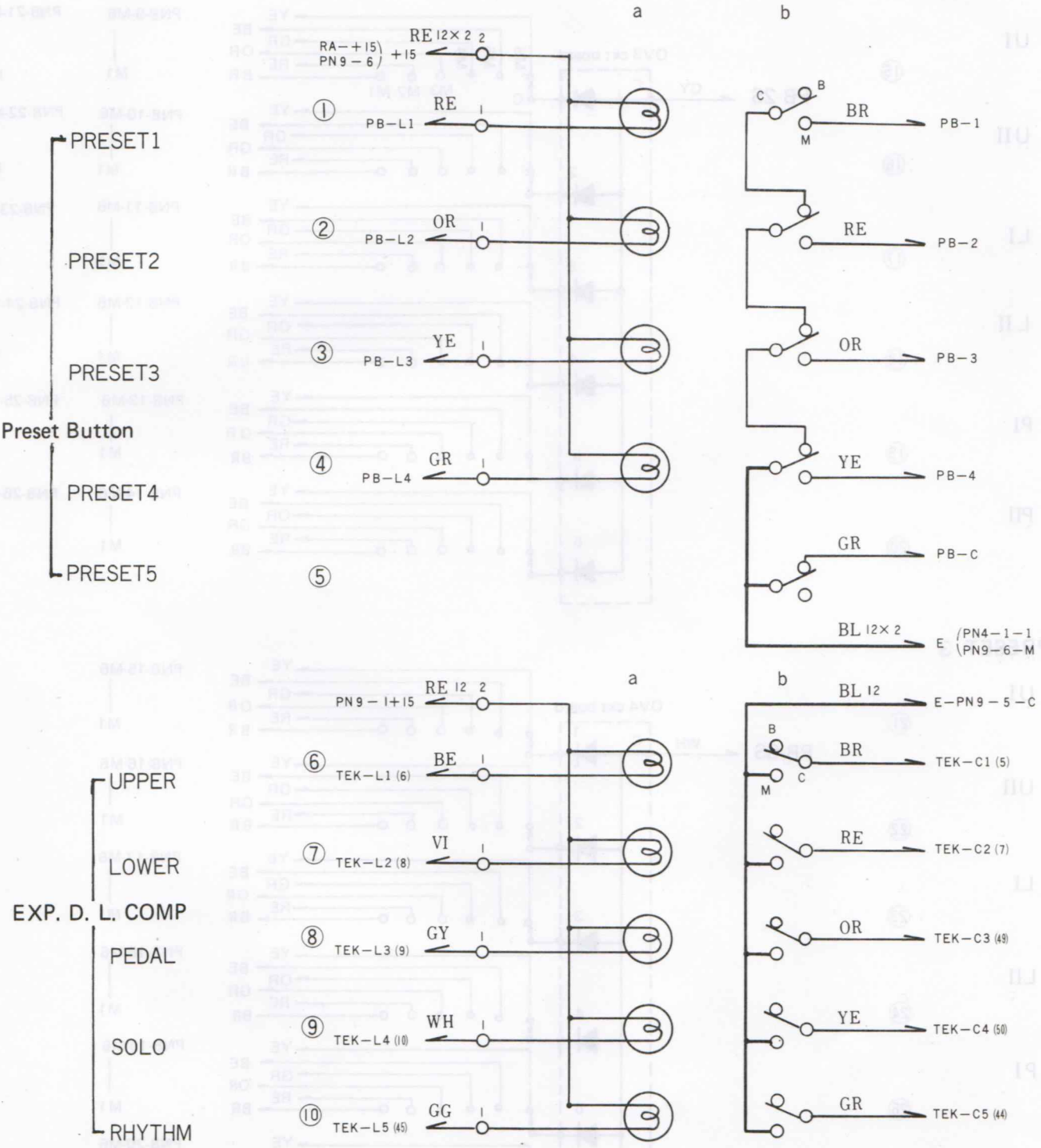

K. L (Knee Lever), Exp. (Expression) and FS (Foot Switch) Circuit Diagram

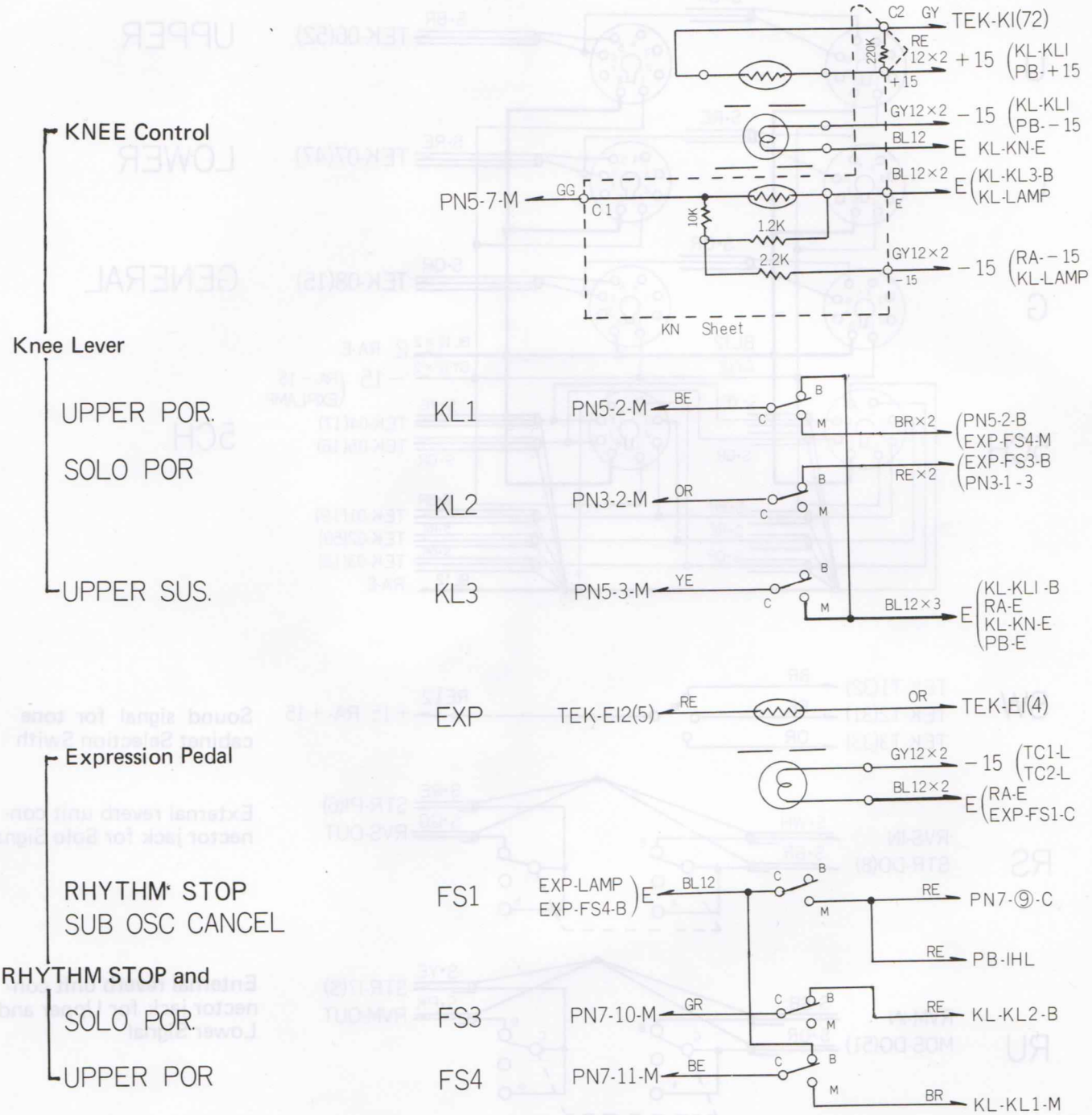

TC (Tone Cabinet Connector) Circuit Diagram

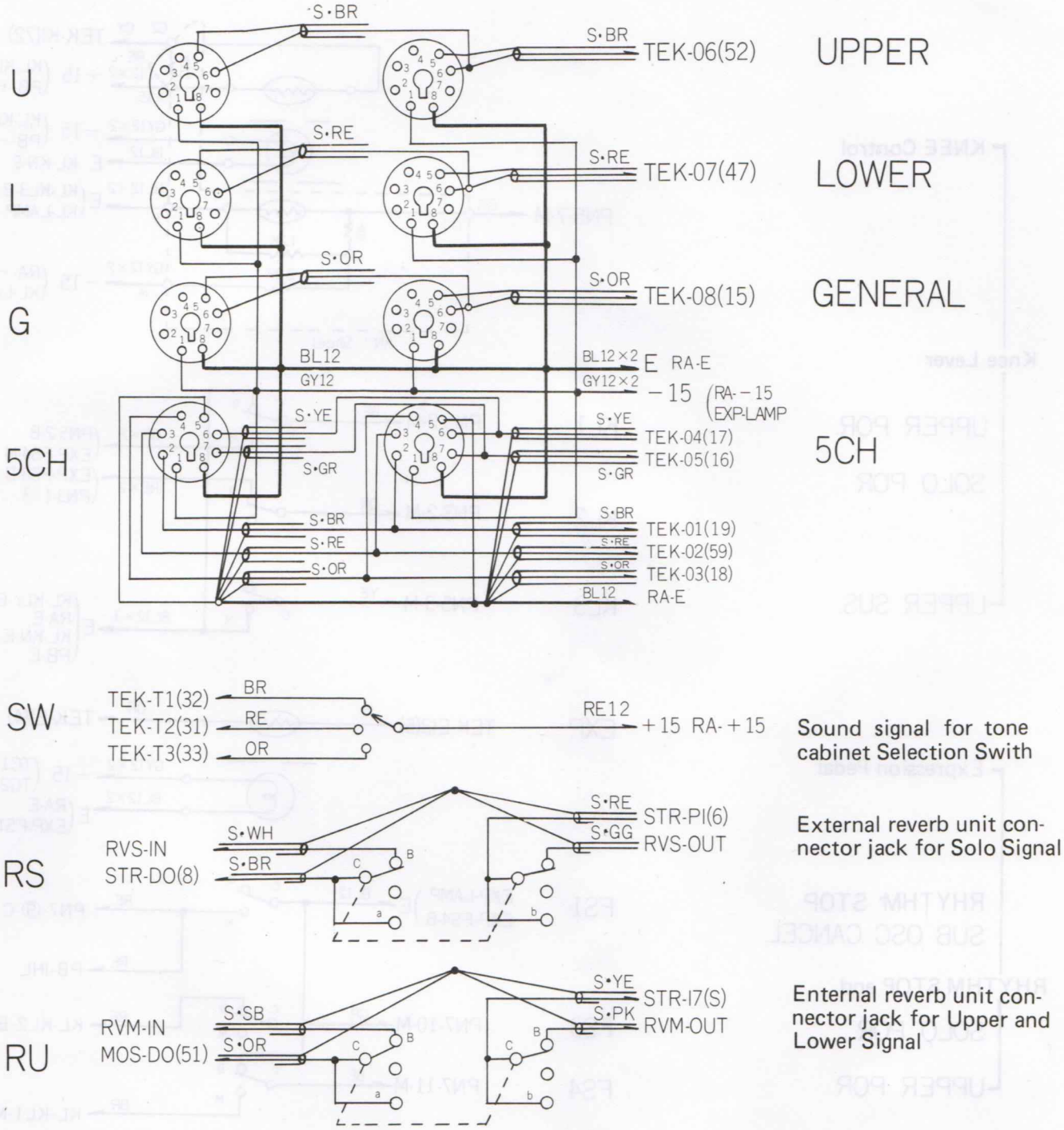

Note) When the external reverb Unit is connected, the reverb Unit in the GX-1 is released.

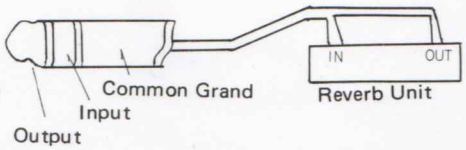

Power Supply Unit Circuit Diagram (1)

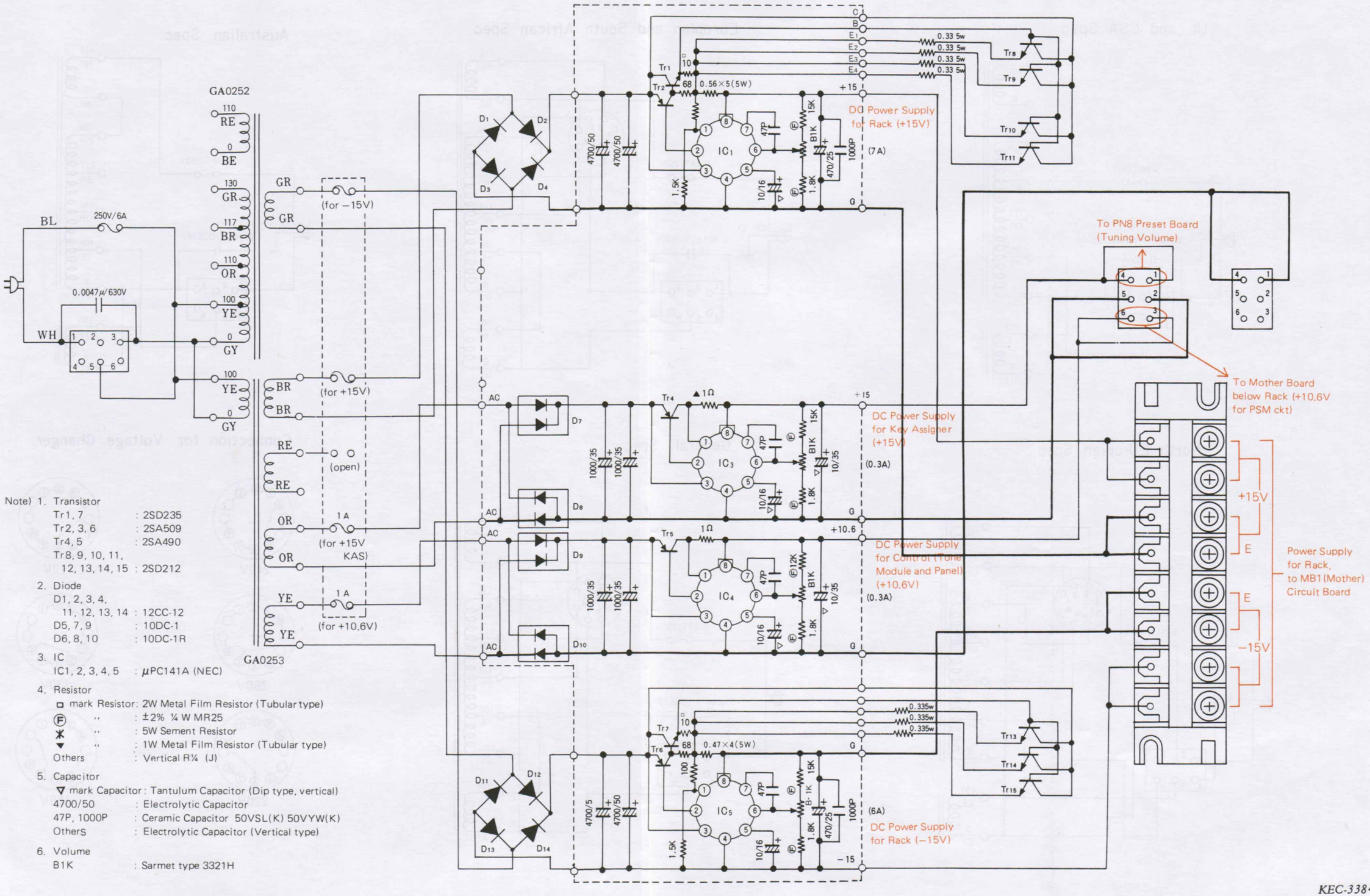

Note) 1. Transistor

Tr1, 7	: 2SD235
Tr2, 3, 6	: 2SA509
Tr4, 5	: 2SA490
Tr8, 9, 10, 11, 12, 13, 14, 15	: 2SD212

2. Diode

D1, 2, 3, 4, 11, 12, 13, 14	: 12CC-12
D5, 7, 9	: 10DC-1
D6, 8, 10	: 10DC-1R

3. IC

IC1, 2, 3, 4, 5	: μPC141A (NEC)

4. Resistor

□ mark Resistor	: 2W Metal Film Resistor (Tubular type)
Ⓕ ,,	: ±2% ¼ W MR25
✱ ,,	: 5W Sement Resistor
▼ ,,	: 1W Metal Film Resistor (Tubular type)
Others	: Vertical R¼ (J)

5. Capacitor

▽ mark Capacitor	: Tantulum Capacitor (Dip type, vertical)
4700/50	: Electrolytic Capacitor
47P, 1000P	: Ceramic Capacitor 50VSL(K) 50VYW(K)
OtherS	: Electrolytic Capacitor (Vertical type)

6. Volume

B1K	: Sarmet type 3321H

Power Supply Unit Circuit Diagram (2)

UL and CSA Spec

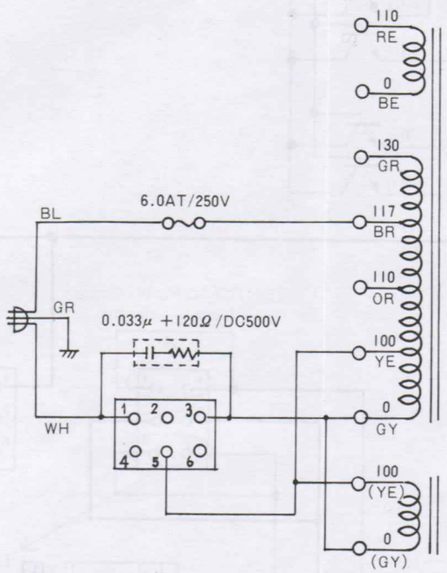

Europian and South African Spec

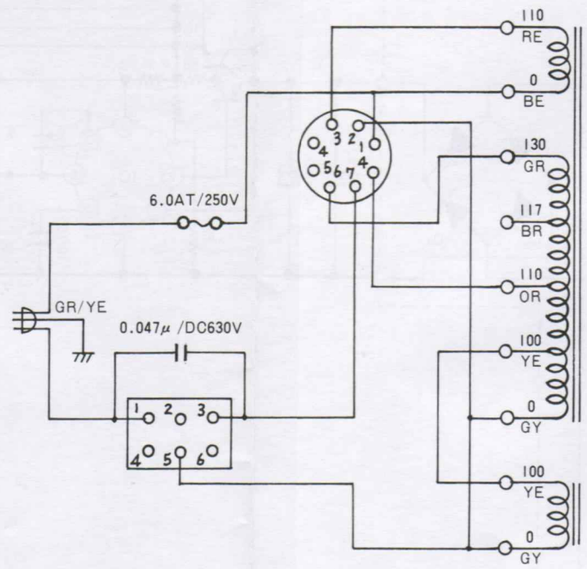

Australian Spec

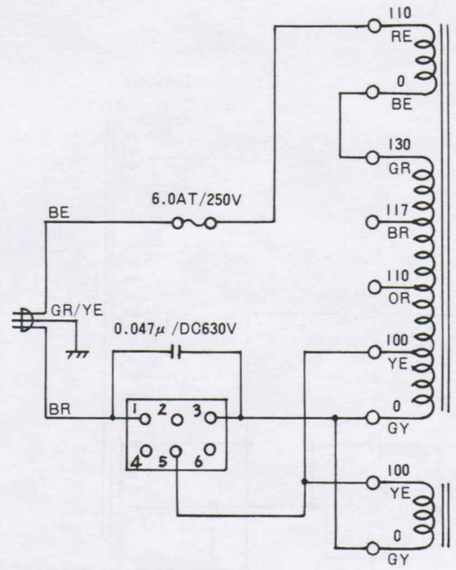

North EUropian Spec

(Set :220V)

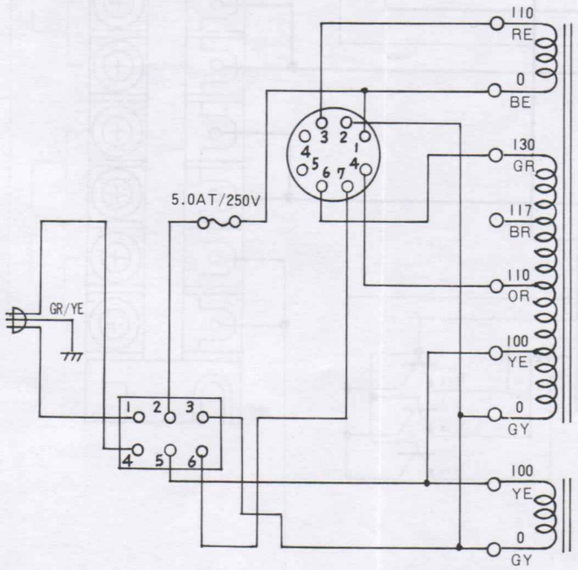

General Spec

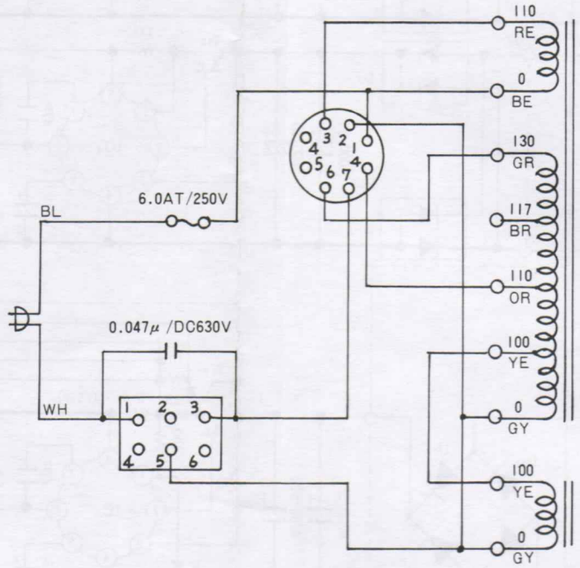

Connection for Voltage Chenger

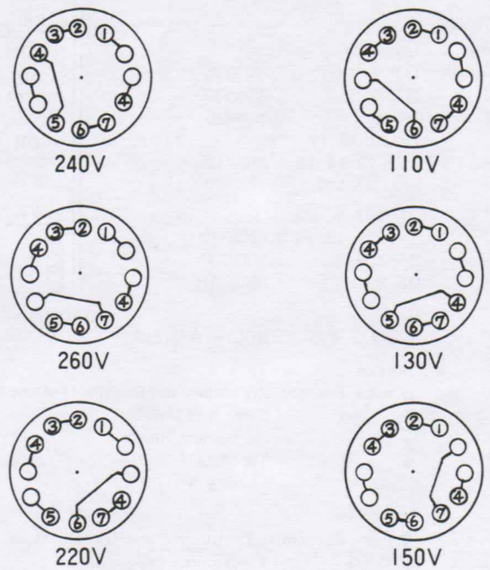

PU (Power Supply Unit) Circuit Board, Adjustment

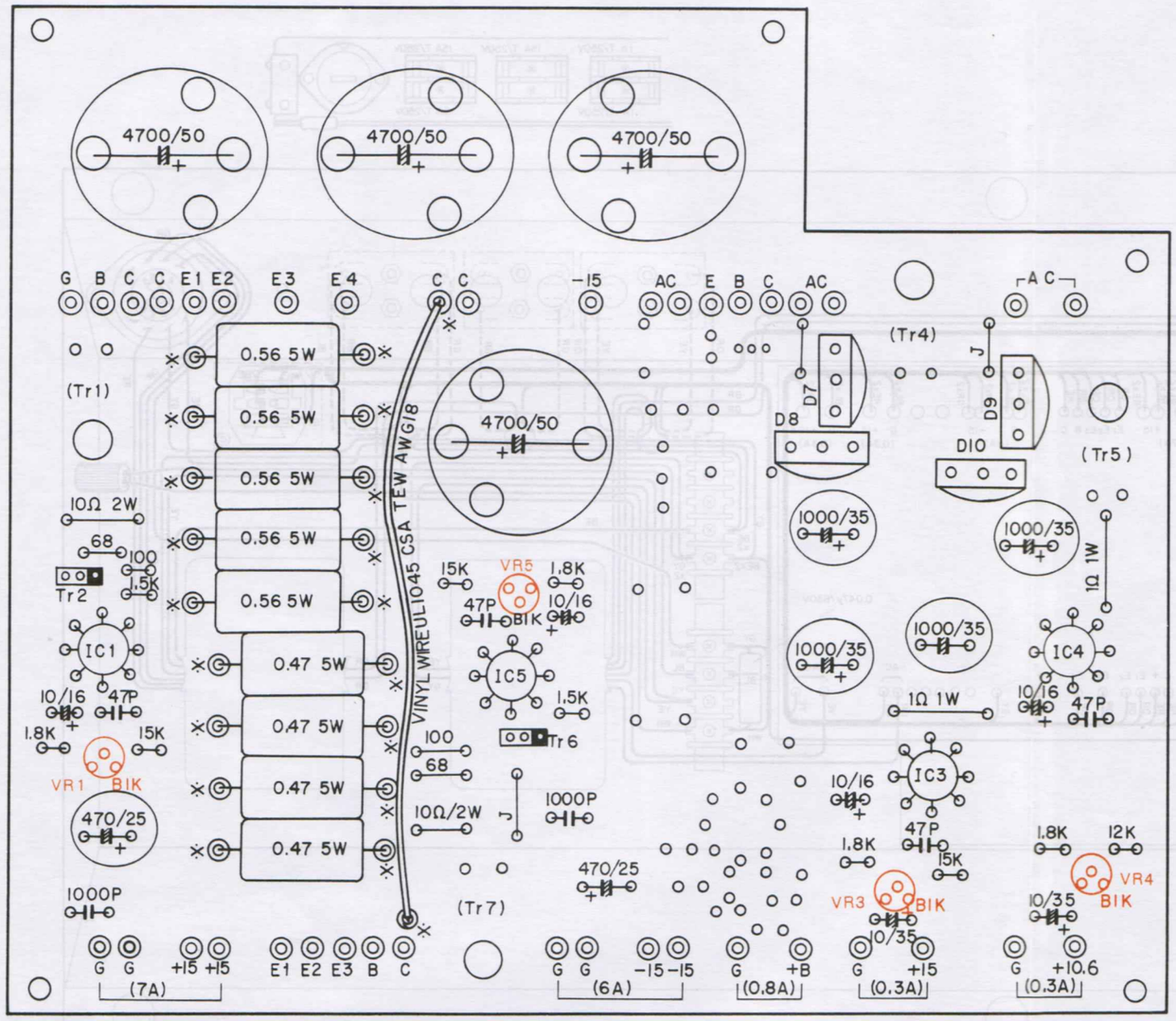

Adjustment Procedures

- ○Main rack +15V power supply (7A) – VR1
- ○Main rack –15V power supply (7A) –VR2
- ○Exclusive +15V (0.3A) power supply for ladder net work in KAS ckt. –VR3
- ○Control 10.6V power supply (0.3A) – VR4

Note: Wherever measuring power voltage, measure on the rack or on the circuit board (± 0.1V variation should be expected.)

Power Supply Unit Wiring (1) 〔General Spec.〕

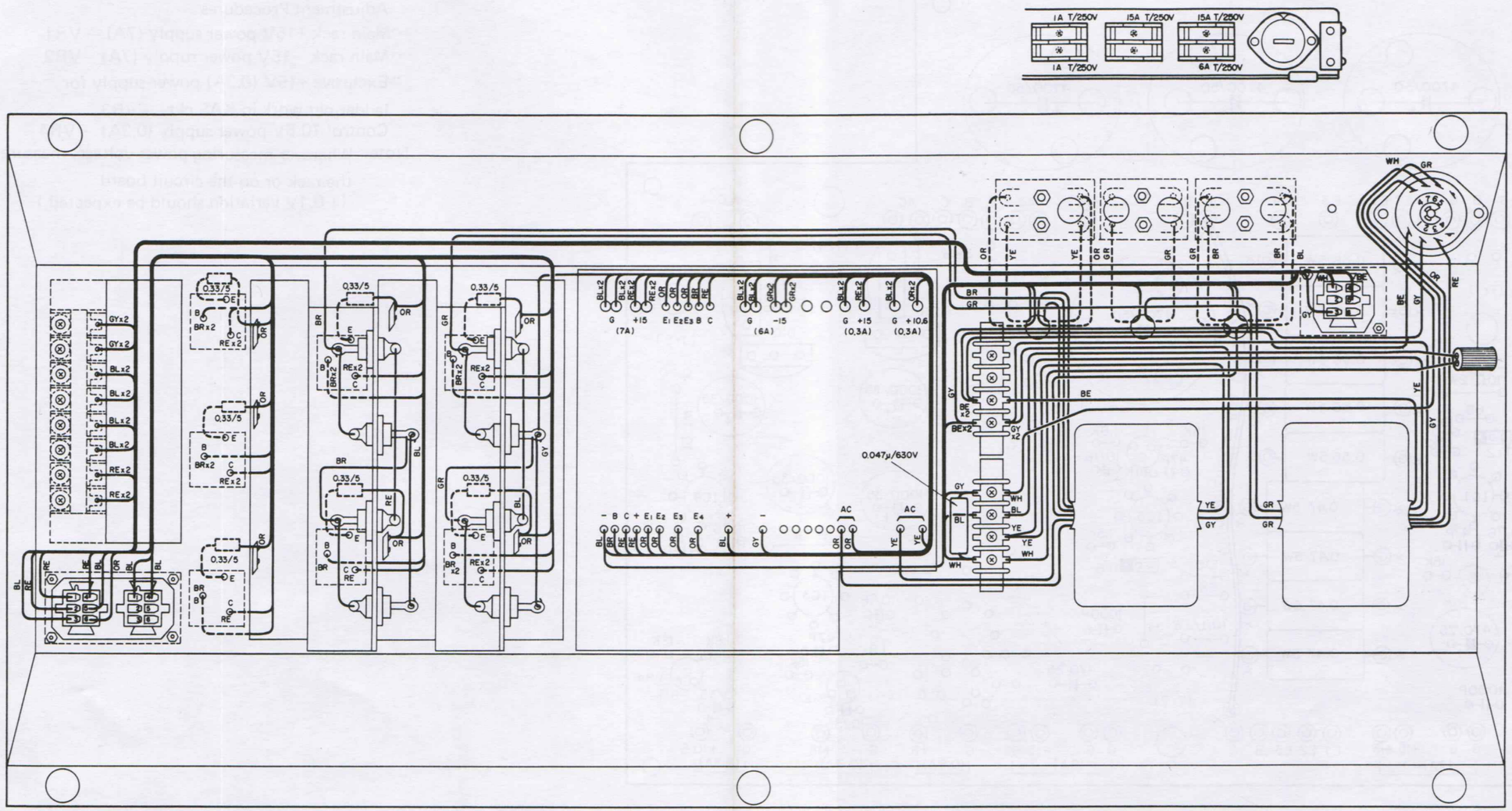

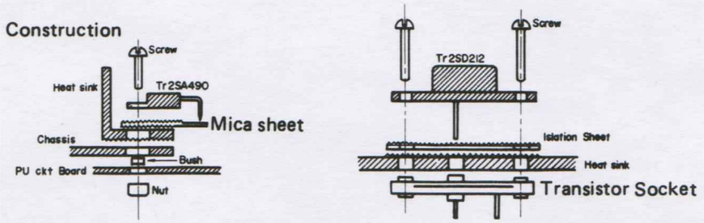

Power Supply Unit Wiring (2) [UL and CSA Spec.]

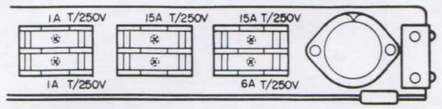

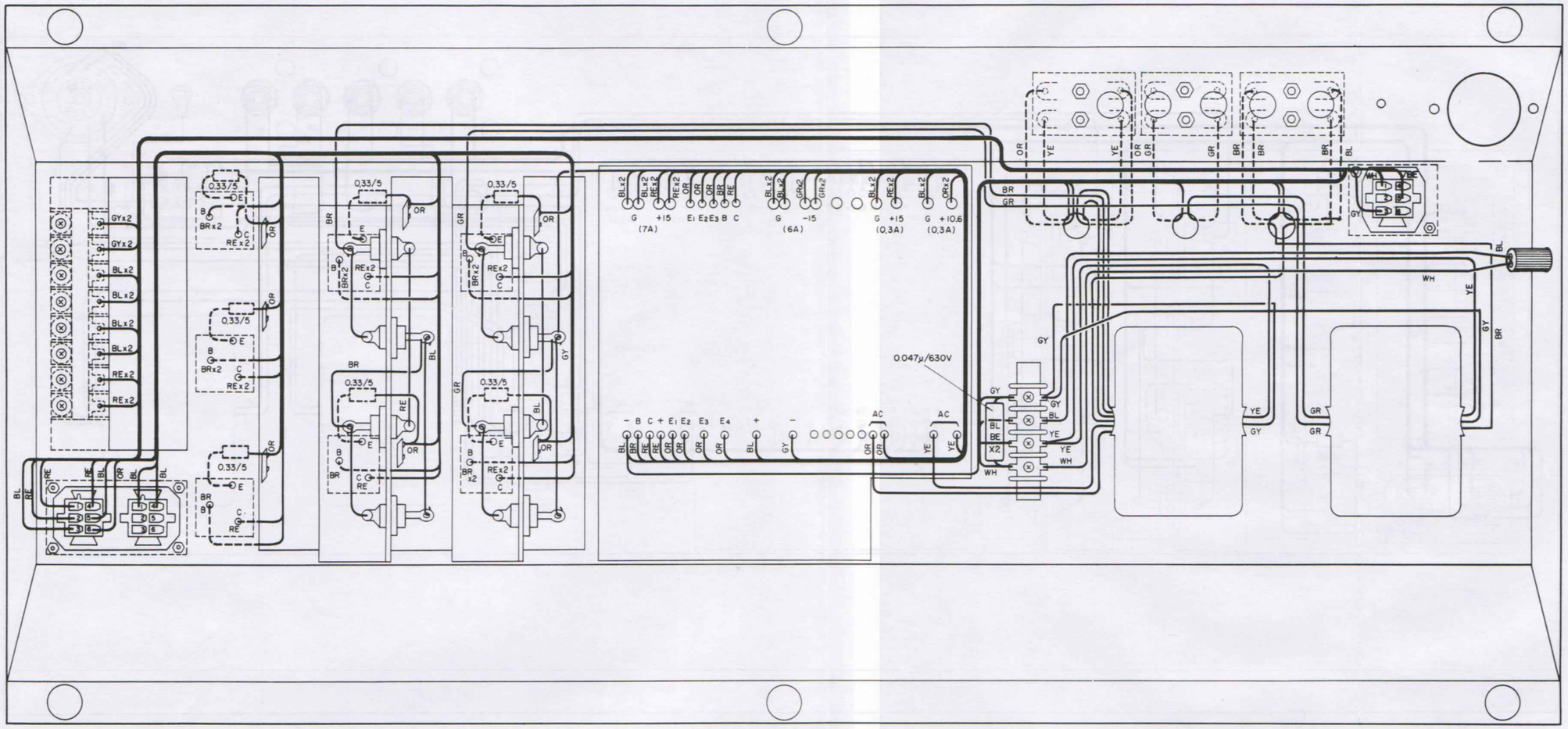

Comstruction

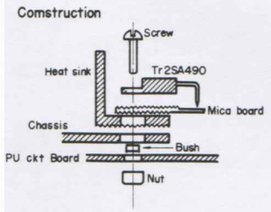

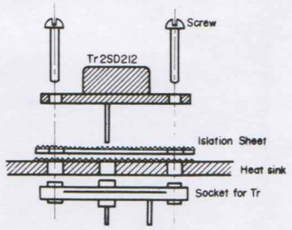

Power Supply Unit Wiring (3) 〔North European Spec.〕

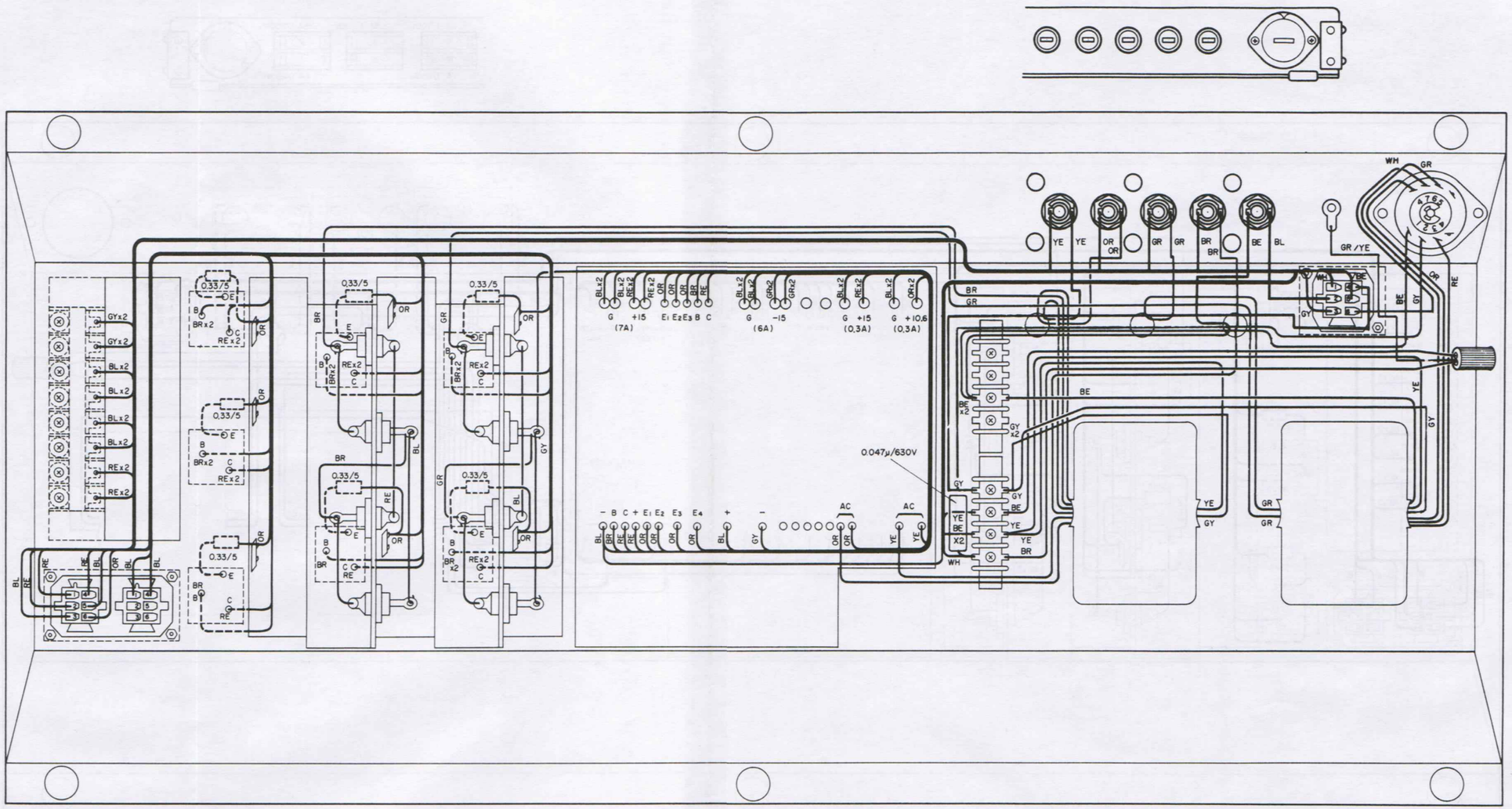

Construction

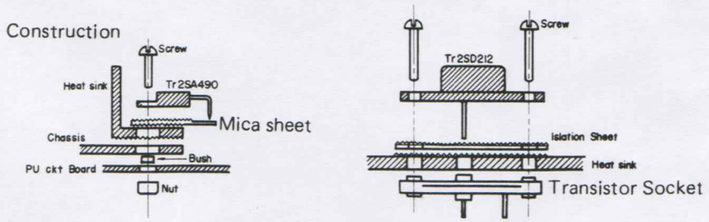

Power Supply Unit Wiring (4) [European and South African Spec.]

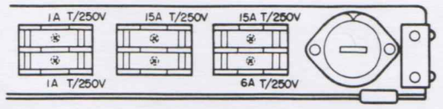

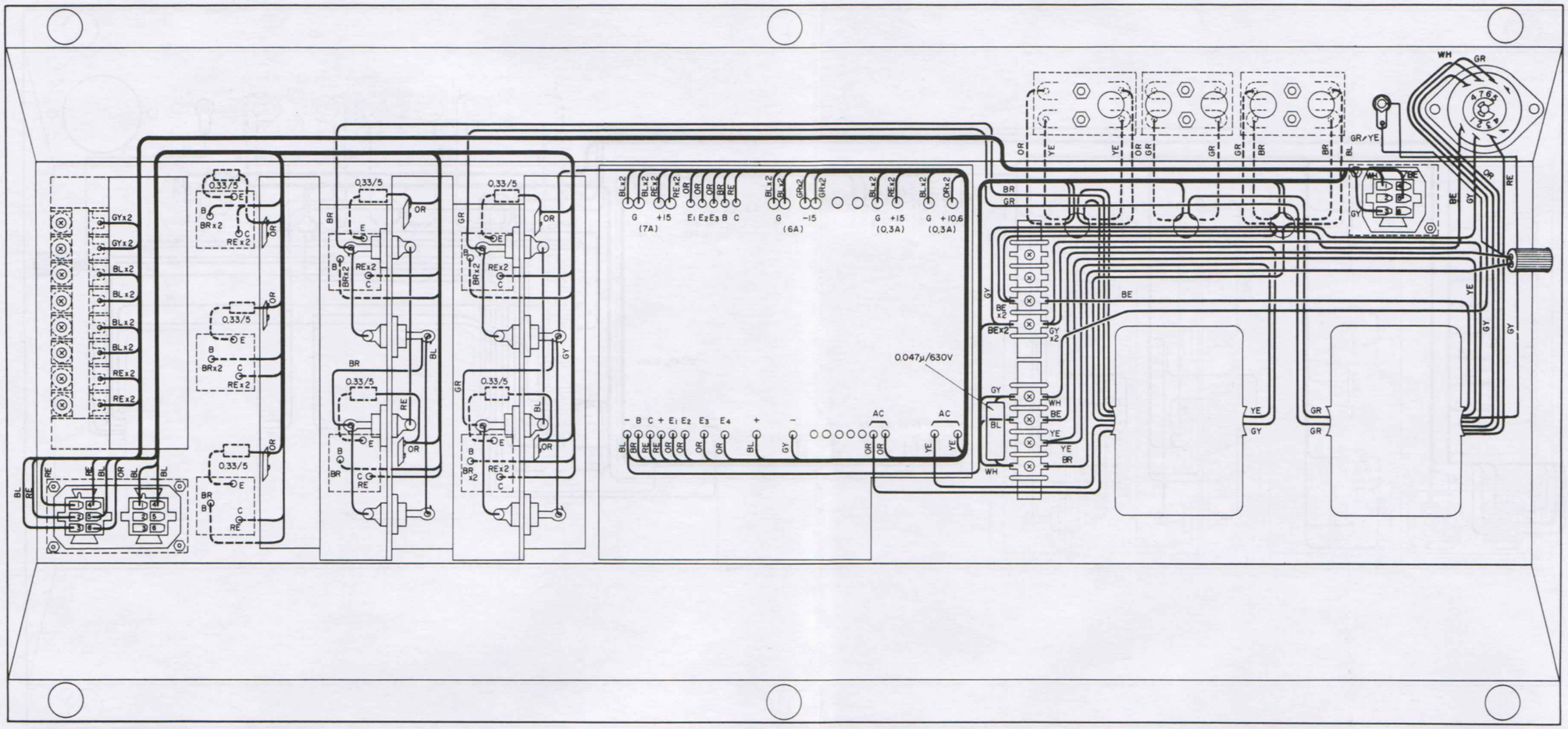

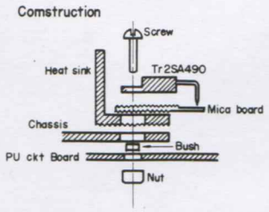

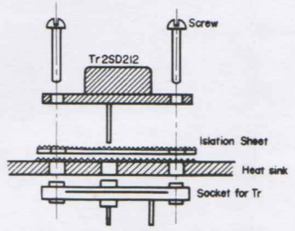

Power Supply Unit Wiring (5) 〔Australian Spec.〕

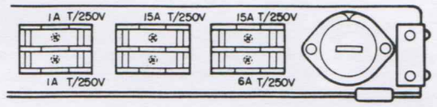

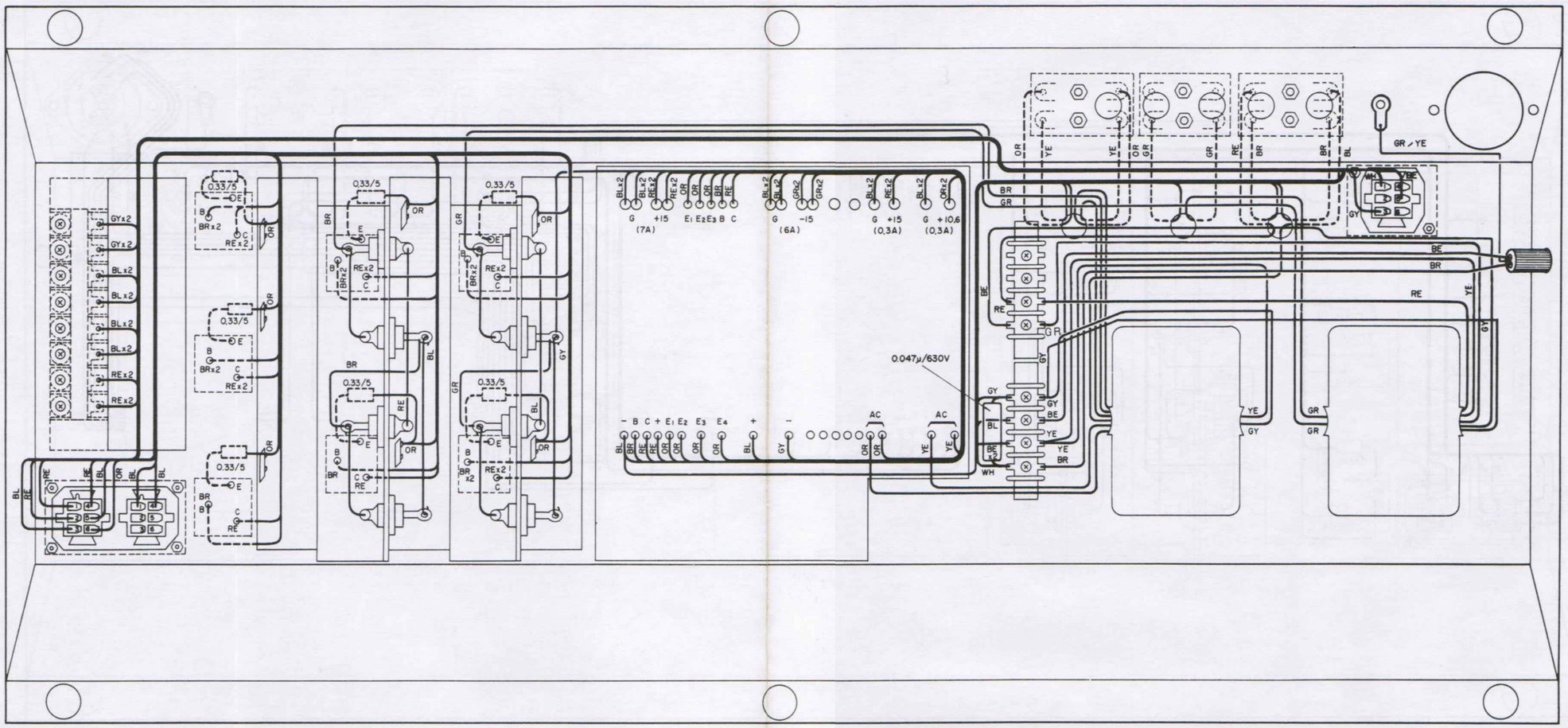

Construction

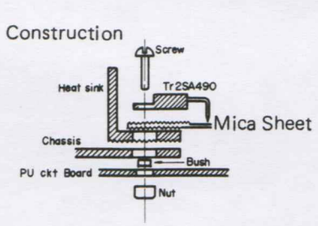

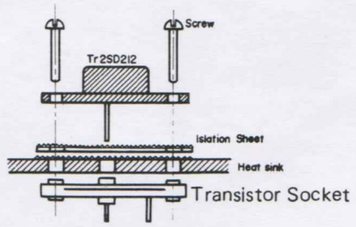

Power Supply Unit Wiring (6) [Japanese Spec.]

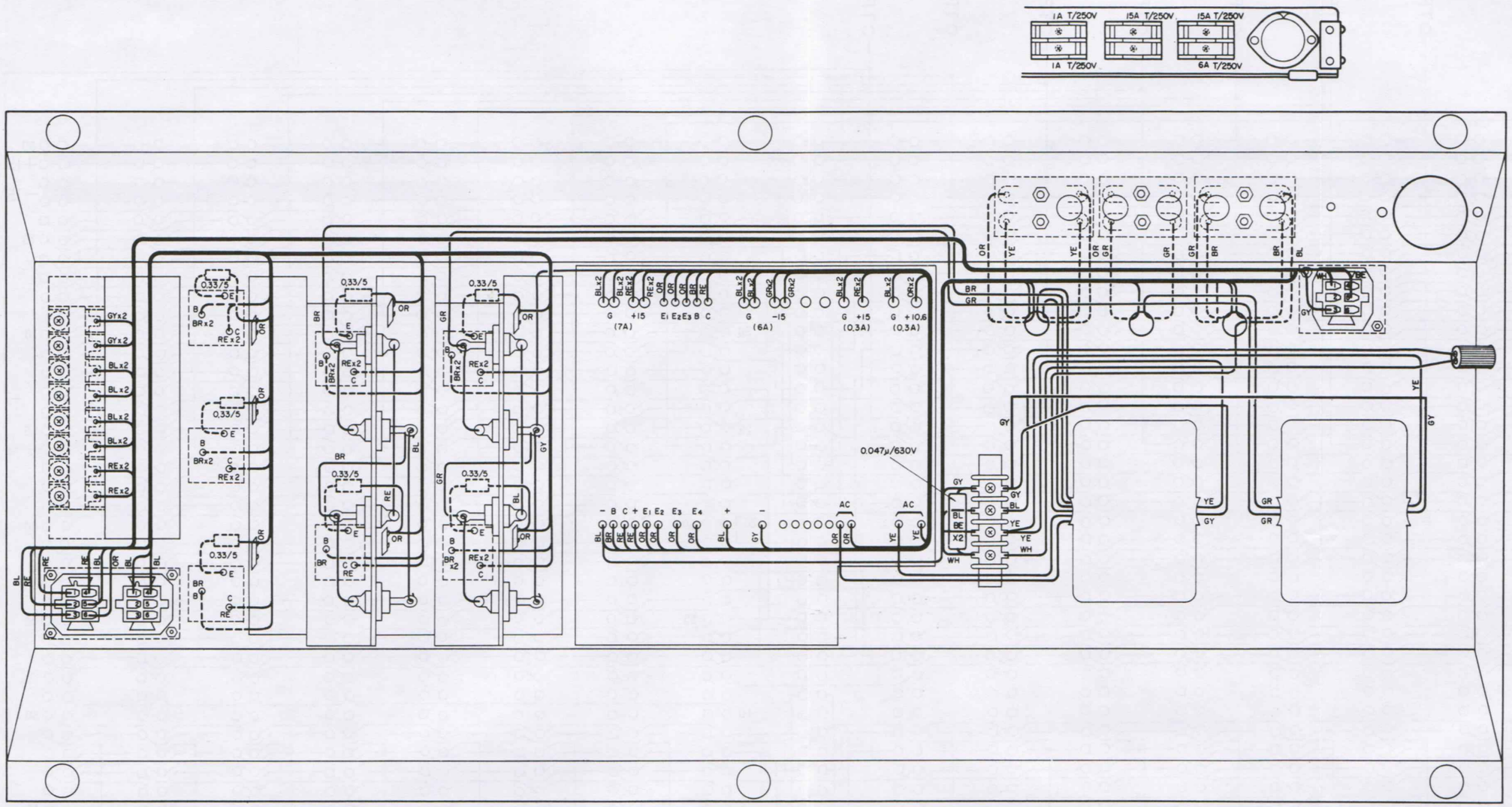

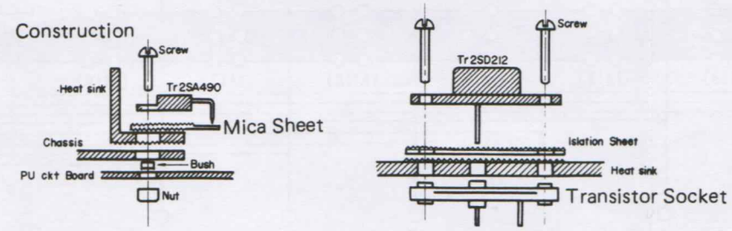

MB 1 (Mother Board) Circuit Diagram. . . Located below the rack

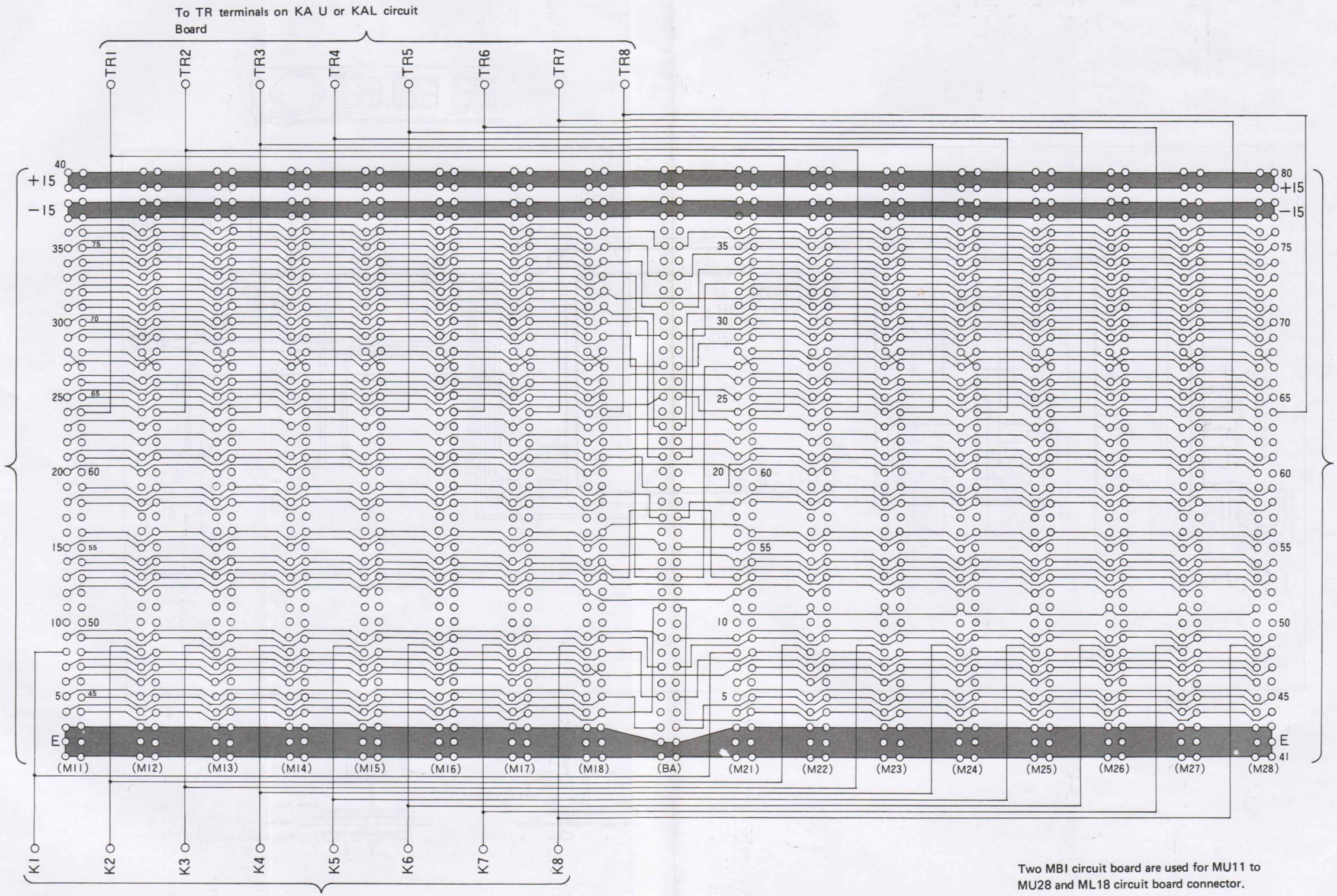

These terminals are connected to Same name terminals on next Mother Board in common.

Two MBI circuit board are used for MU11 to MU28 and ML18 circuit board connector.

MB2 (Mother Board) Circuit Diagram. . . Located below the rack

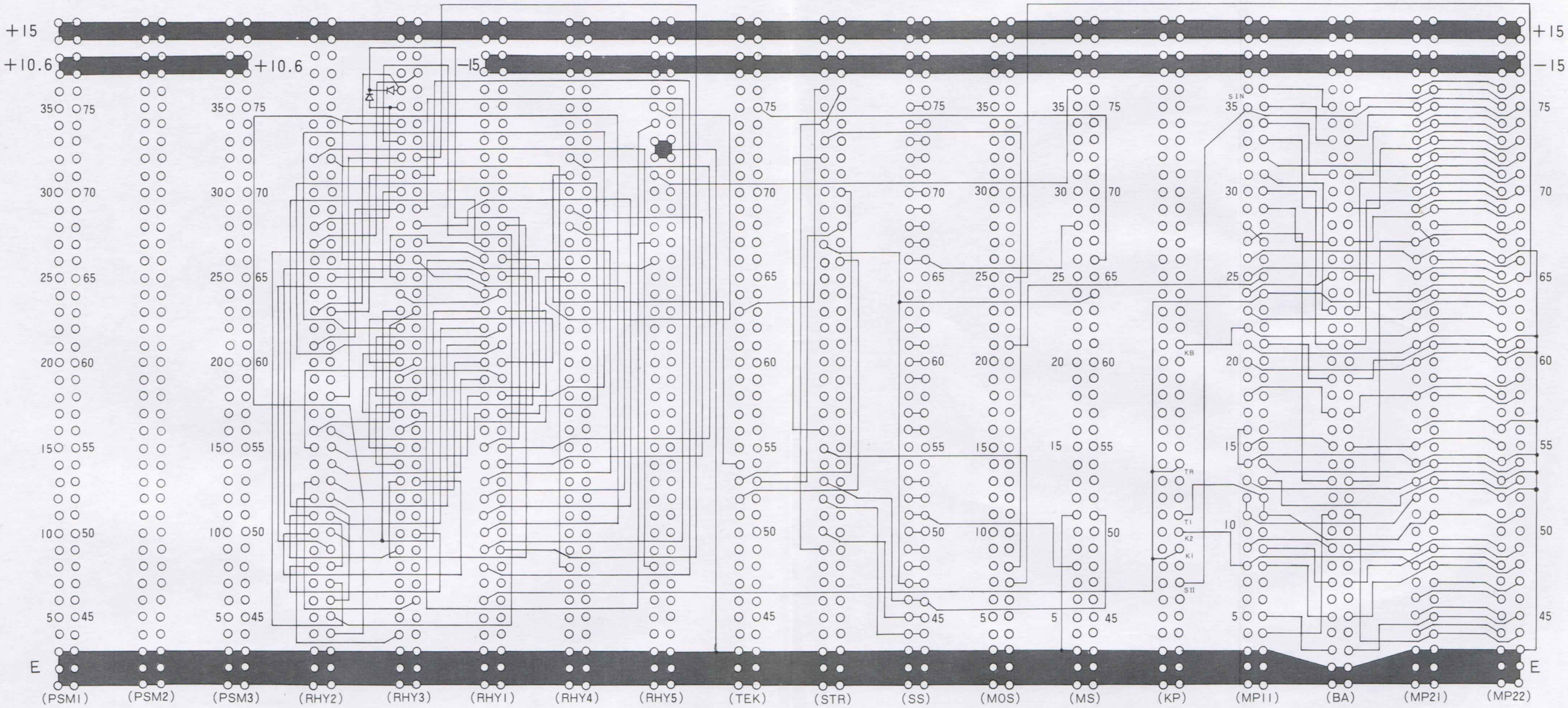

Initial Clear Switch Circuit Diagram

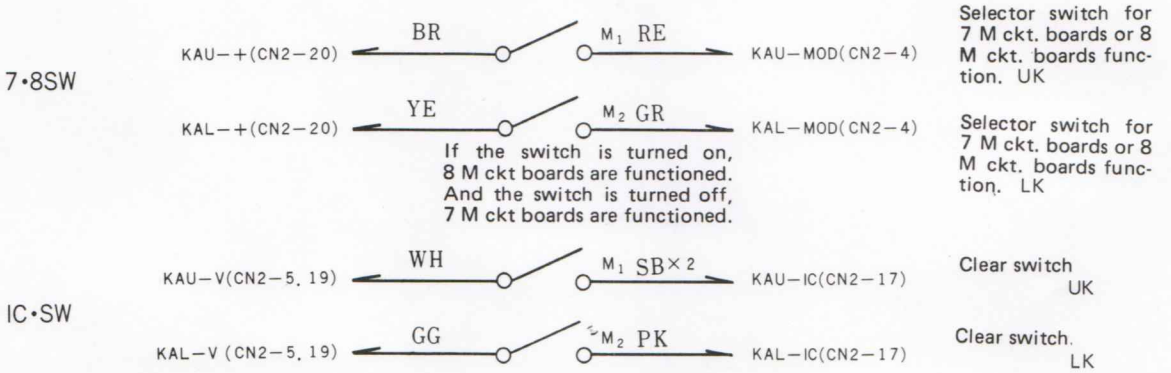

GX-1 GENERAL INSPECTION AND ADJUSTMENT PROCEDURES

1-0) The following abbreviations are used for the setting of each control section shown in the GX-1 general operation manual.

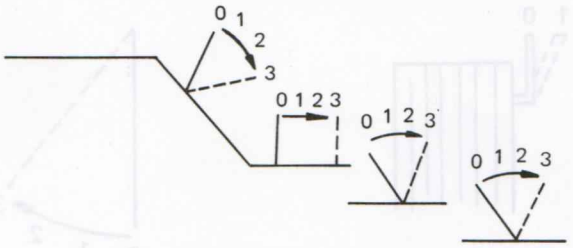

1) Control panel section TVR slide VR

2) For levers without 0, 1, 2, 3 click-stop positions, the center position will be called "C".

3) Slide switch

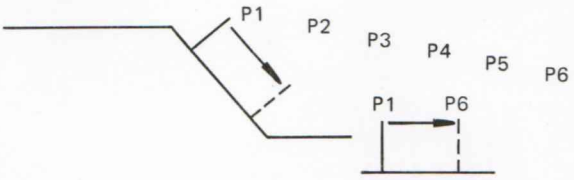

4) Tablet, see-saw switch

5) Lever switch

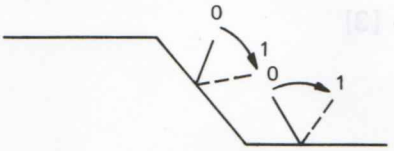

6) 300° VR

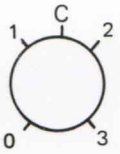

7) Expression pedal

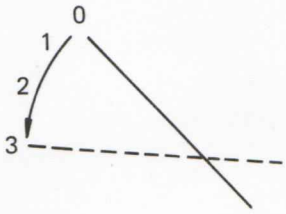

8) Expression switch

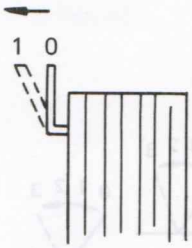

9) Knee lever

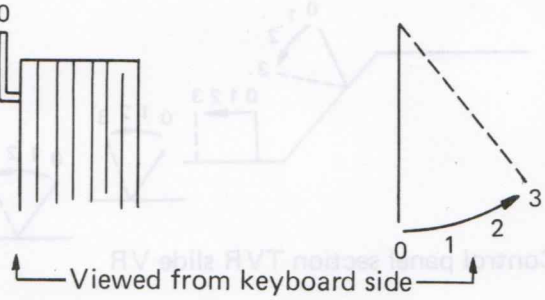

10) Lamps

Off condition: "0"

On condition: "1"

11) Second touch (solo)

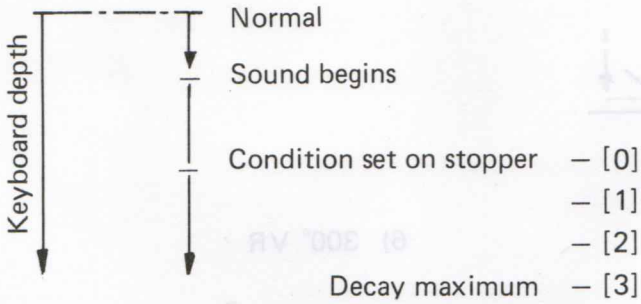

1-1) Control Section Conditions and Variation Limits

	Controller	Standard Position	Check Point	Measurement at Standard Setting	Measurement when Lever or Switch is Adjusted: Controller Condition 0	Controller Condition 1 or 3	Remarks
1	Pitch Bend U	0	MU11 PB (53)	-15^{V}DC	-15^{V}	$+15^{V}$	
2	Pitch Bend L	0	ML11 PB (53)	-15^{V}DC	-15^{V}	$+15^{V}$	
3	Pitch Bend P	0	MP 11 PB (53)	-15^{V}DC	-15^{V}	$+15^{V}$	
4	Coupler L to U	0	Upper Manual Coupler Connection Point	OPEN	OPEN	$+6^{V}$	
5	Coupler U to L	0	LK 〃	OPEN	OPEN	$+6^{V}$	
6	Coupler L to P	0	PK 〃	OPEN	OPEN	$+6^{V}$	
7	Coupler S to U	0	UK 〃 Brake	OPEN	OPEN	0^{V}	
8	Sustain U	0	MU11 SUS(72)	$+10^{V}$DC	$+10^{V}$	0^{V}	
9	Sustain L	0	ML11 SUS (72)	$+10^{V}$DC	$+10^{V}$	0^{V}	
10	Sustain P	0	MP11 SUS (72)	$+10^{V}$DC	$+10^{V}$	0^{V}	
11	Volume U	0	Level set on STR sheet				See section 1.5
12	Volume L	0					
13	Volume P	0					
14	Brilliance U	C	MU1 f1 (23)	0^{V}DC	-2.5^{V}	$+2.5^{V}$	See section 1.2
15	Brilliance L	C	ML1 f1 (23)	0^{V}DC	-2.5^{V}	$+2.5^{V}$	〃
16	Brilliance P	C	MP1 f1 (23)	0^{V}DC	-2.5^{V}	$+2.5^{V}$	〃
17	Resonance U	0	MU1 Q2 (25)	0^{V}DC	0^{V}	$+10^{V}$	
18	Resonance L	0	ML1 Q2 (25)	0^{V}DC	0^{V}	$+10^{V}$	
19	Resonance P	0	MP1 Q2 (25)	0^{V}DC	0^{V}	$+10^{V}$	
20	Mixing U	C	STR I1	(A two-channel mixed signal)	(Channel I only)	(Channel II only)	
21	Mixing L	C	STR I3	(A two-channel mixed signal)	(Channel I only)	(Channel II only)	
22	Mixing P	C	STR I16	(A two-channel mixed signal)	(Channel I only)	(Channel II only)	
23	Reverb U, L	0	Level set on STR sheet				See section 1.5
24	Reverb S	0					
25	Total Volume	0	TEK-TL (30)	$+15^{V}$DC	$+15^{V}$	0^{V}	
26			Level set on TEK sheet		Maximum 20dB variation		See section 1.5
27	Sample Hold VCF	0	MS-f5 (16)	0^{V}p-p	0^{V}p-p	3^{V}p-p (random)	Sample Hold should be activated

	Controller	Standard Position	Check Point	Measurement at Standard Setting	Measurement When Lever or Switch is Adjusted: Controller Condition 0	Measurement When Lever or Switch is Adjusted: Controller Condition 1 or 3	Remarks
28	Sample Hold VCO	0	MS - V3 (12)	0Vp-p	0Vp-p	3Vp-p (random)	Sample Hold should be activated.
29	Sample Hold SW	0	SS - CI (30)	0Vp-p	0Vp-p	0 ~ −3V (random)	—do.—
30	Ring Modulator KB	0	SS-FR4 (29)	0VDC	0V	0~ +3V	Solo keyboard push position detection
31	Ring Modulator OSC SP	C	SS - FR3 (28)	−2VDC	−4V	0V	
32			SS - BO (31)	7Hz 3Vp-p Waveform:	1.75Hz	28Hz	
33	Ring Modulator OSC L	0	SS - BI (16)	0Vp-p	0Vp-p	3Vp-p wave	
34	Ring Modulator NOISE C	0	SS - NC (13)	−8V −0V 10Hz	Shown at left	+15VDC	
35			SS - NO (12)	Maximum 10Vp-p; random wave with 10 Hz cycle	Same as left	Cycle: 10KHz	
36	Ring Modulator NOISE L	0	SS - NI (17)	0Vp-p	0V	Max.10Vp-p 10KHz random wave	
37	Ring Modulator NOR-MOD	0	MS - RM1 (67)	0Vp-p	3Vp-p Unchanging harmonic	3Vp-p Variable harmonic	One solo key pressed
38	Envelop AT	0	MS-TAA (50)	0VDC	0VDC	+10V	
39	Envelope SUS	0	MS - SUS (72)	+10VDC	+10VDC	0V	
40	Pitch EG IP	0	STR-IL (28)	0VDC	0V	+10V	
41	Pitch EG 1D	0	STR-IC (25)	0VDC	0V	+10V	
42	Pitch EG 2D	0	STR-FC (24)	0VDC	0V	+10V	
43	Pitch EG FP	0	STR-FL (26)	0VDC	0V	+10V	
44	Brilliance	C	MS - f1 (23)	0VDC	−2.5V	+2.5V	
45	Resonance	0	MS - Q2 (25)	0VDC	0VDC	+10V	
46	Sub Oscillator FUN	—					See section 1.6
47	Sub Oscillator SPEED	C	SS- FR1 (21)	−2VDC	−4V	0V	
48			SS - SO (27)	7Hz Waveform:	1.75Hz	28Hz	
49	Sub Oscillator VCA	0	MS - L2 (56)	0Vp-p	0V	3Vp-p	Waveform selected by Function Selector
50	Sub Oscillator VCF	0	MS - f2 (22)	0Vp-p	0V	3Vp-p	
51	Sub Oscillator VCO	0	MS-V1 (14)	0Vp-p	0V	+4 −2 Vp-p	
52	Solo Volume	0	Level set on STR sheet				See section 1.5
53	Solo Portamento	0	VCO III FT in MS sheet	Rise time within 1mSec. when C2-C6 pushed.	Same as left	Rise time more than 2 seconds.	
54	1st Touch A	0	SS-TL (29)	0VDC	0V	+10V	Solo key pressed at fastest speed
55	1st Touch I	0	MS-TAF (57)	0VDC	0V	+10V	Level set necessary. See section 1.2.
56	(2nd Touch Detection)		TEK-TO2 (69)	0VDC	0V	+8V	Solo key maximum depth

	Controller	Standard Position	Check Point	Measurement at Standard Setting	Measurement When Lever or Switch is Adjusted		Remarks
					Controller	Condition	
					0	1 or 3	
57	2nd Touch P	0	MS - V2 (13)	0V	0V	0V	Solo key not deeply pressed
58		0	MS - V2 (13)	0V	0V	+4V	Solo key maximum depth
59	2nd Touch B	0	MS - f3 (21)	0V	0V	0V	Solo key not deeply pressed
60		0	MS - f3 (21)	0V	0V	+2V	Solo key maximum depth
61	2nd Touch L	0	TEK - C (76)	4V	4V	0V	Solo key not deeply pressed
62		0	TEK - C (76)	4V	4V	+7	Solo key maximum depth
63	2nd Touch S	0	SS - FR1 (21)	−2V	−2V	−4V	Solo key not deeply pressed
64		0	SS - SO (27)	7Hz Waveform:	7Hz	1.75Hz	Solo key not deeply pressed
65		0	SS - FR1 (21)	−2V	−2V	0V	Solo key maximum depth
66	2nd Touch O	0	MS - V1 (14)	0Vp-p	0V	0V	Solo key not deeply pressed
67		0	MS - V1 (14)	0Vp-p	0V	+4 −2 V	Solo key maximum depth
68	2nd Touch F	0	MS - f2 (22)	0Vp-p	0V	0V	Solo key not deeply pressed
69		0	MS - f2 (22)	0Vp-p	0V	3Vp-p	Solo key maximum depth
70	2nd Touch A	0	MS - L2 (56)	0Vp-p	0V	0V	Solo key not deeply pressed
71		0	MS - L2 (56)	0Vp-p	0V	+2.5 −0.5 V	Solo key maximum depth
72	3rd Touch V	0	MS - V1 (14)	0V	0V	+4 −2 Vp-p	Solo key oscillated to maximum left-right
73	3rd Touch W	0	MS - f4 (20)	0V	0V	3Vp-p	Solo key oscillated to maximum left-right
74	3rd Touch R	0	MS - Q1 (26)	0V	0V	+3 −0.5 V	Solo key oscillated to maximum left-right
75	Upper Touch R	0	MU1 - Q1 (26)	0V	0V	3Vp-p	Upper manual key oscillated to maximum left-right
76	Upper Touch W	0	MU1 - f4 (20)	0V	0V	,,	Upper manual key oscillated to maximum left-right
77	Upper Touch V	0	MU1 - V3 (12)	0V	0V	,,	Upper manual key oscillated to maximum left-right
78	Random noise VCF	0	MU1 - f3 (21)	0V	0V	Maximum 10Vp-p Random wave	
79	Random noise VCO	0	MU1 - V2 (13)	0V	0V	Maximum 10Vp-p Random wave	
80	Random noise COLOR	0	MOS - C (75)	+8V E 10Hz	Fig. at left	+15VDC	
81			MOS - NO (34)	Maximum 10Vp-p 10Hz cycle random	Same as left	Cycle period 10KHz	
82	Upper Manual Sub Oscillator Switch	0	MOS - FR2 (9)	0V	0V	0−+3V	Corresponds to solo key depressed position
83	Upper Manual Sub Oscillator Switch FUN	—					See section 1.6
84	Upper Manual Sub Oscillator Switch SPEED	C	MOS - FR1 (8)	−2V	−4V	0V	
85			MOS - SO1 (50)	7Hz 3Vp-p Waveform:	1.75Hz	28Hz	

	Controller	Standard Position	Check Point	Measurement at Standard Setting	Measurement When Lever or Switch is Adjusted Controller Condition 0	1 or 3	Remarks
86	Sub Oscillator VCA	0	MU1 - L2 (56)	0V	0V	+5.5 -0.5 V	
87	Sub Oscillator VCF	0	MU1 - f2 (22)	0V	0V	4Vp-p	
88	Sub Oscillator VCO	0	MU1 - V1 (14)	0V	0V	6Vp-p	
89	Upper Portamento	0	KAU-POR (CN2-16)	0V	0V	+15V	
90	Knee Lever Control: Upper Manual Portamento	0	KAU-POR(CN2-16)	0V	0V	0V	Knee lever position "0" Upper Manual portamento "3"
91			KAU-POR(CN2-16)	0V	0V	+15V	Knee lever position "3" Upper Manual portamento "3"
92	Knee Lever Control Upper Manual Sustain	0	MU1-SUS (72)	+10V	+10V	+10V	Knee lever position "0" Upper manual sustain "3"
93			MU1-SUS (72)	+10V	+10V	0V	Knee lever position "3" Upper manual sustain "3"
94	Knee Lever	0	TEK - KO (63)	0V	0V	+10	
95	Knee Lever Control VCO	0	MU1 - V1 (14)	0V	0V	0V	Knee lever position "0"
96			MU1 - V1 (14)	0V	0V	6Vp-p	Knee lever position "3"
97	Knee Lever Control VCF	0	MU1 - f2 (22)	0V	0V	0V	Knee lever position "0"
98			MU1 - f2 (22)	0V	0V	4Vp-p	Knee lever position "3"
99	Knee Lever Control VCA	0	MU1 - L2 (56)	0V	0V	0V	Knee lever position "0"
100			MU1 - L2 (56)	0V	0V	+5.5 -0.5 V	Knee lever position "3"
101	Knee Lever Control SPEED	0	MOS - FR1 (8)	−2V	−2V	−4V	Knee lever position "0"
102			MOS - SO1 (50)	7Hz 3Vp-p Waveform:	7Hz	1.75Hz	—do.—
103			MOS - FR1 (8)	−2V	−2V	0V	Knee lever position "3"
104	Lower Manual Sub Oscillator Switch	0	MOS - FR4 (7)	0V	0V	0~+3V	Corresponds to solo key depressed position
105	Lower Manual Sub Oscillator Switch FUN	—					See section 1.6
106	Lower Manual Sub Oscillator Switch SPEED	C	MOS - FR3 (5)	−2V	−4V	0V	
107			MOS - SO2 (52)	7 Hz 3Vp-p Waveform:	1.75Hz	28Hz	
108	Lower Manual Sub Oscillator Switch VCA	0	ML1 - L2 (56)	0V	0V	+5.5 -0.5 V	
109	Lower Manual Sub Oscillator Switch VCF	0	ML1 - f2 (22)	0V	0V	4Vp-p	
110	Lower Manual Sub Oscillator Switch VCO	0	ML1 - V1 (14)	0V	0V	6Vp-p	
111	Manual Balance	C					See section 1.7
112	Knee Lever Control Lower Manual Sustain	0	ML1 - SUS (72)	+10V	+10V	+10V	Knee lever position "0" Lower manual sustain "3"
113			ML1 - SUS (72)	+10V	+10V	0V	Knee lever position "3" Lower manual sustain "3"

	Controller	Standard Position	Check Point	Measurement at Standard Setting	Measurement When Lever or Switch is Adjusted: Controller Condition 0	Measurement When Lever or Switch is Adjusted: Controller Condition 1 or 3	Remarks
114	Knee Lever Control VCO	0	ML1 - V1 (14)	0V	0V	0V	Knee lever position "0"
115			ML1 - V1 (14)	0V	0V	6Vp-p	Knee lever position "3"
116	Knee Lever Control VCF	0	ML1 - f2 (22)	0V	0V	0V	Knee lever position "0"
117			ML1 - f2 (22)	0V	0V	4Vp-p	Knee lever position "3"
118	Knee Lever Control VCA	0	ML1 - L2 (56)	0V	0V	0V	Knee lever position "0"
119				0V	0V	+5.5 -0.5 V	Knee lever position "3"
220	Knee Lever Control SPEED	0	MOS - FR3 (5)	−2V	−2V	−4V	Knee lever position "0"
121			MOS - SO2 (52)	7Hz 3Vp-p Waveform:	7Hz	1.75Hz	Knee lever position "0"
122			MOS - FR3 (5)	−2V	−2V	0V	Knee lever position "3"
123	Foot Switch Upper Manual Sub Oscillator Cancel	0	PB - IHU (17)	+15	+15V	+15V	Foot switch "0"
124			PB - IHU (17)	+15	+15V	0V	Foot switch "1"
125	Foot Switch Lower Manual Sub Oscillator Cancel	0	PB - IHL (3)	+15	+15V	+15V	Foot switch "0"
126			PB - IHL (3)	+15	+15V	0V	Foot switch "1"
127	Foot Switch Rhythm Stop	0	RHY1-RB (4)	+15	+15V	+15V	Foot switch "0"
128			RHY1 - PB (4)	+15	+15V	0V	Foot switch "1"
129	Foot Switch Solo Portamento	0	VCO III FT in MS sheet	Rise time over 2 sec. when C3-C6 pressed	Same as left	Within 1m Sec.	Foot switch "0"; Solo portamento "3"
130			VCO III FT in MS sheet	Rise time over 2 sec. when C3-C6 pressed	Same as left	More than 2m Sec.	Foot switch "1"; Solo portamento "3"
131	Foot Switch, Upper Manual Portamento	0	KAU-POR (CN2-16)	+15V	+15V	0V	Foot switch "0"; Upper portamento "3"
132			KAU-POR (CN2-16)	+15V	+15V	+15V	Foot switch "1"; Upper portamento "3"
133	Tuning S	C	KS - TP (86)	2V	Less than 1.88V	More than 2.12V	
134	Tuning U	C	KAU-T3 (CN2-3)	4V	Less than 3.77V	More than 4.24V	
135	Tuning L	C	KAL - T3 (CN2-3)	4V	Less than 3.77V	More than 4.24V	
136	Tuning P	C	KP - TP (35)	2V	Less than 1.88V	More than 2.12V	
137	Wave Motion U	C	MU21-V4 (11)	0V	−2.5V	+2.5V	
138	Wave Motion L	C	ML21-V4 (11)	0V	−2.5V	+2.5V	
139	Wave Motion PII	C	MP21-V4 (11)	0V	−2.5V	+2.5V	
140	Wave Motion PIII	C	MP31-V4 (11)	0V	−2.5V	+2.5V	
141	Preset 1	0	PB - 1 (36)	0.5V	0.5V	0V	
142			PB - 1S (33)	0V	0V	+15V	

	Controller	Standard Position	Check Point	Measurement at Standard Setting	Measurement When Lever or Switch is Adjusted: Controller Condition 0	Controller Condition 1 or 3	Remarks
143	Preset 2	0	PB - 2 (30′)	0.5V	0.5V	0V	
144			PB - 2S (23′)	0V	0V	+15V	
145	Preset 3	0	PB - 3 (14)	0.5V	0.5V	0V	
146			PB - 3S (5)	0V	0V	+15V	
147	Preset 4	0	PB - 4 (5′)	0.5V	0.5V	0V	
148			PB - 4S (4′)	0V	0V	+15V	
149	Preset C	0	PB - C (36′)	0.5V	0.5V	+7V	
150			PB - CS (15′)	+15V	+15V	+15V	
151			PB - CS (15′)	—	0V	+15V	When any of preset 1-4 are set to "1".

1-2) How to Set Effect Levers

	Controller	Adjustment Point & Method	Conditions
14	Brilliance U	Set VR1 for 0V at Brilliance lever central position according to Upper lever on R sheet	
15	Brilliance L	Set VR2 for 0V at Brilliance lever central position according to Lower lever on R sheet	
16	Brilliance P	Set VR3 for 0V at Brilliance lever central position according to Pedal lever on R sheet	
30	Solo Manual Ring Modulator Switch	−3V at 6th pin of IC14 with STR-VR8	Keying C3 on Solo manual
82	Upper Manual Sub Oscillator Switch	0V at STR-LO (11), with STR-VR9	
104	Lower Manual Sub Oscillator Switch		Keying C3 on Solo manual
32	Ring Modulator OSC Speed	7Hz at SS-BO (31), with SS-VR4	Speed lever center
48	Solo Sub Oscillator Speed	7Hz at SS-SO (27), with SS-VR3	Speed lever center
54	1st Touch Detector	+10V at (TEK-TO1 (26), with TEK-VR20	Solo key pressed at fastest speed
56	2nd Touch Zero Point	0V at TEK-TR2 (68), with TEK-VR1	Solo key not touched
62	2nd Touch Volume Zero Balance Level	No click at TEK-GO (23), with TEK-VR12	2nd Touch Volume switch on-off
		Same level as GI (75) at TEK-GO (23), with TEK-VR13	2nd Touch Volume switch OFF
67 ~71	2nd Touch Sub Oscillator Level	3V-p-p at TEK-OS (22), with TEK-VR14	Solo key pressed to maximum depth
85	Upper Manual Sub Oscillator Speed	7Hz at MOS-SO1 (50), with MOS-VR3	Speed lever center
89	Upper Manual Portamento	Adjust KAS-VR15 for appropriate differences in portamento timing between the various lever settings.	

	Controller	Adjustment Point & Method	Conditions
96~100	Knee Lever Control Upper Manual Sub Oscillator Level	3Vp-p at TEK-UO (73), with TEK-VR15	Knee lever position "3"
115~119	Knee Lever Control Lower Manual Sub Oscillator Level	3Vp-p at TEK-LO (74), with TEK-VR16	Knee lever position "3"
107	Lower Manual Sub Oscillator Speed	7Hz at MOS-SO2 (52), with MOS-VR4	Speed lever center
72	Solo 3rd Touch Level	3Vp-p at TO3 (65), with TEK-VR3	Solo key vibrated to maximum left-right
75	Upper Manual Touch Level	6Vp-p at TV-01 (4), with TV-VR (B20K)	Upper manual vibrated to maximum left-right
	Expression Pedal Control	−2.5V at TEK-TP (60), with TEK-VR6	Expression pedal maximum

1-3) Tone Board Checks

Tone Board		Control Terminal	Tone Board		Control Terminal
1	ATA	M - ATA (44)	14	PW	M - PW (74)
2	1DA	M - 1DTA (9)	15	LV	M - LC1 (61)
3	2DA	M - 2DTA (73)	16	BPF	M - fc13 (75)
4	SLA	M - SL (45)	17	HPF	M - fc14 (76)
5	ATF	M - ATF (69)	18	N	RHY5 $C_1 \sim C_7$
6	1DF	M - 1DTF (48)	19	2T	M - G2 (34)
7	2DF	M - 2DTF (71)	20	HP	M - G3 (33)
8	IL	M - IL (70)	21	BP	M - G4 (32)
9	AL	M - AL (49)	22	T	M - G5 (31)
10	HF	M - f6 (15)	23	P	M - G6 (30)
11	LF	M - f8 (18)	24	S	M - G7 (29)
12	HQ	M - Q3 (24)	25	PC	M - PC (47)
13	LQ	M - Q4 (27)	26	PWM	MOS - $C_1 \sim C_7$

18N:

UI	PHY5 - C1 (17)
UII	PHY5 - C2 (19)
LI	PHY5 - C3 (21)
LII	PHY5 - C4 (23)
PI	PHY5 - C5 (38)
PII	PHY5 - C6 (30)
S	PHY5 - C7 (36)

26 PWM:

UI	MOS - C1 (55)
UII	MOS - C5 (68)
LI	MOS - C2 (54)
LII	MOS - C6 (66)
PI	MOS - C3 (62)
PII	MOS - C7 (64)
S	MOS - C4 (71)

1. Check that each of the above control terminals is independently and continuously controlled from 0 to 10V.
2. Check that the various functions are operating properly.

a) ATA, ATF : 1 mSec ~ 1 Sec
b) 1DTA, 2DTA, 1DTF, 2DTF : 10 mSec ~ 10 Sec
c) SL, LV : 0 ~ Full (linear)
d) IL, AL : 0 ~ ± 5 OCT.
e) HF, LF, BPF, LPF : 25 Hz ~ 10 OCT. UP
f) HQ, LQ : 0.5 ~ 15
g) PW : 50% ~ 90%
h) N, 2T, HP : 0 to Full (linear)
i) BP, T, P.S : 0 or Full (2 value)
j) PC : Either ⌒ or ⌣ VCFAEG

1-4) Tuning Procedures

	Section	Adjustment Point	Conditions	Measurement Point	Standard Value
M Sheet Zero Adjustment — Same for MU, ML, MP & MS					
1	M		Cut off volume control 2 by turning all the way to the left		
2	M		Short K (8) and VCO III		
3	M	VR1		VCO III VC2 terminal	Within ±0.1mV
4	M	VR9	Continue adjustment as above	VCO III FT terminal	Within ± 0.1mV
MU & ML Tuning (MU and ML are exactly the same)					
5	MU1(ML1)	VR2	Hold down A3 OVT2	Where generator signal can be checked	440.0 Hz
6	MU1(ML1)	VR3	Hold down A3 OVT1		220.0 Hz
7	MU1(ML1)	VR4	Hold down A3 OVT4		880.0 Hz
8	MU1(ML1)	VR5	Hold down A3 OVT8		1760.0 Hz
9	MU1(ML1)	–	Hold down A3 OVT5		1100.0 Hz
10	MU1(ML1)	–	Hold down A3 OVT6		1320.0 Hz
11	MU2(ML2)	VR2	Wave motion center Hold down A3 OVT2		440.0 Hz
12	MU2(ML2)	VR3	Wave motion center Hold down A3 OVT1		220.0 Hz
13	MU2(ML2)	VR4	Wave motion center Hold down A3 OVT4		880.0 Hz
14	MU2(ML2)	VR5	Wave motion center Hold down A3 OVT8		1760.0 Hz
15	MU2(ML2)	–	Wave motion center Hold down A3 OVT3		660.0 Hz
16	MU2(ML2)	–	Wave motion center Hold down A3 OVT7		1540.0 Hz
MP Sheet Tuning					
17	MP1	VR2	Hold down C1 OVT1		65.41 Hz
18	MP1	VR3	Hold down C1 OVT½		32.70 Hz
19	MP1	VR4	Hold down C1 OVT2		130.8 Hz
20	MP1	VR5	Hold down C1 OVT4		261.6 Hz
21	MP1	–	Hold down C1 OVT5/2		163.5 Hz
22	MP1	–	Hold down C1 OVT3		196.2 Hz

	Section	Adjustment Point	Conditions	Measurement Point	Standard Value
23	MP2	VR2	Wave motion center Hold down C1 OVT1	Where generator signal can be checked	65.41 Hz
24	MP2	VR3	Wave motion center Hold down C1 OVT ½	Where generator signal can be checked	32.70 Hz
25	MP2	VR4	Wavemotion center Hold down C1 OVT 2	Where generator signal can be checked	130.8 Hz
26	MP2	VR5	Wave motion center Hold down C1 OVT 4	Where generator signal can be checked	261.6 Hz
27	MP2	–	Wave motion center Hold down C1 OVT 3/2	Where generator signal can be checked	98.10 Hz
28	MP2	–	Wave motion center Hold down C1 OVT 7/2	Where generator signal can be checked	228.9 Hz

KS, MS Sheet Tuning (Over Tone No. 2 on the solo keys is tuned on the KS Sheet)

29	KS	VR1	Hold down A4 OVT 2	Where generator signal can be checked	440.0Hz
30	MS	VR3	Hold down A4 OVT1	Where generator signal can be checked	220.0Hz
31	MS	VR4	Hold down A4 OVT4	Where generator signal can be checked	880.0Hz
32	MS	VR5	Hold down A4 OVT8	Where generator signal can be checked	1760.0Hz
33	MS	VR6	Hold down A4 OVT1/2	Where generator signal can be checked	110.0Hz
34	MS	–	Hold down A4 OVT1/8	Where generator signal can be checked	27.5Hz

Portamento Tuning

35	KS	VR4	SK-C3, Portamento lowest section Each keyed in turn	Reduce beat to zero	
36	KS	VR5	SK-C6, Portamento highest section Each keyed in turn	Reduce beat to zero	
37	KS	Repeat 35 and 36 above		Reduce beat to zero	

1-5) Level Set and Check

1. Tone Module Setting (UI, UII, LI, LII, PI, PII, S)

1	ATA	+10		14	PW	0	
2	1DA	+10		15	LV	+10	
3	2DA	+10		16	BPF	0	
4	SLA	+10		17	HPF	0	
5	ATF	+10		18	N	0	
6	1DF	+10		19	2T	0	
7	2DF	+10		20	HP	0	
8	IL	0		21	BP	0	
9	AL	0		22	T	0	
10	HF	0		23	P	0	
11	LF	+10		24	S	+10	
12	HQ	0		25	PC	+10	
13	LQ	0		26	PWM	0	

2. Lever Set at Other than Standard Conditions

	Function	Set Value
11	Volume U	3
12	–do.– L	"
13	–do.– P	"
25	Master Volume	3
49	Volume S	3
106	Over Tone	All at 2
107	Wave Motion	0, 3

3. Level Set Observation Point 5 CH. Output Terminal Adjustment Point STR-VR2, 3, 4, 6 RHY4-VR20 U, L, G.

UK	Press the eight white keys C3 - C4 intermittently, all at the same time; set immediately after pressing
LK	–do.–
PK	Press middle C (C1) intermittently; set immediately after pressing.
SK	Press C4 intermittently; set immediately after pressing.
RHY	Set the level using the JR1 sound (rhythm speed: fastest, image controller: center)
REV.M	After the upper manual level is set, use the STR sheet I4B to set I4A for a –5dB value.
REV.S	After the solo manual level is set, use the STR sheet I2B to set I2A for a –6dB value.

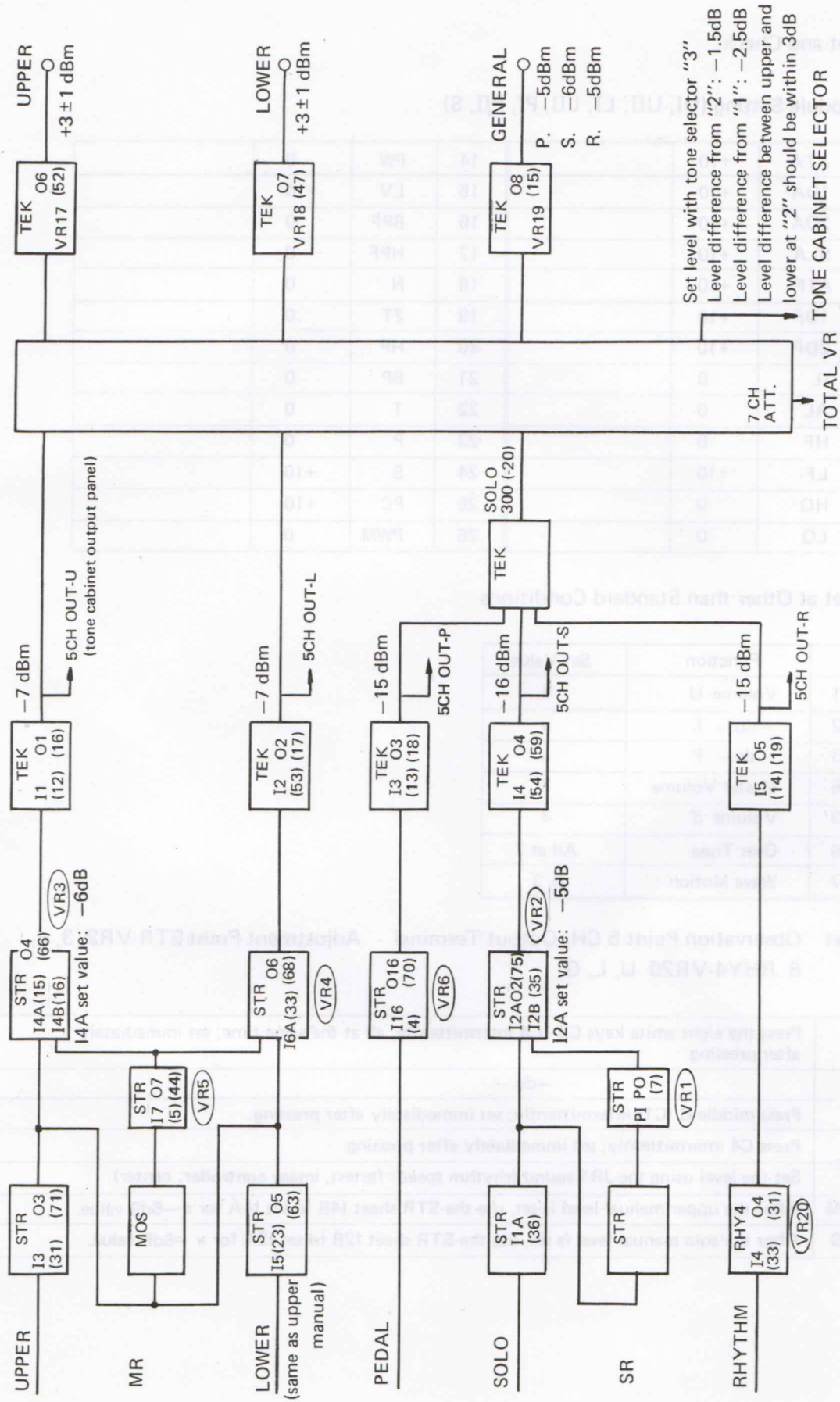
UPPER
+3 ± 1 dBm
TEK O6 VR17 (52)
LOWER
+3 ± 1 dBm
TEK O7 VR18 (47)
GENERAL
P. —5dBm
S. —6dBm
R. —5dBm
TEK O8 VR19 (15)
Set level with tone selector "3"
Level difference from "2": —1.5dB
Level difference from "1": —2.5dB
Level difference between upper and lower at "2" should be within 3dB
TONE CABINET SELECTOR
TOTAL VR
7 CH ATT.
SOLO 300 (-20)
TEK
—7 dBm
5CH OUT-U (tone cabinet output panel)
TEK O1 I1 (12) (16)
—7 dBm
5CH OUT-L
TEK O2 I2 (53) (17)
—15 dBm
5CH OUT-P
TEK O3 I3 (13) (18)
—16 dBm
5CH OUT-S
TEK O4 I4 (54) (59)
—15 dBm
5CH OUT-R
TEK O5 I5 (14) (19)
STR O4 I4A(15) (66) I4B(16)
I4A set value: —6dB
VR3
STR O6 I6A(33) (68)
VR4
STR O16 I16 (4) (70)
VR6
STR I2AO2(75) I2B (35)
I2A set value: —5dB
VR2
STR I7 O7 (5)(44)
VR5
STR PI PO (7)
VR1
STR I3 (31) O3 (71)
MOS
STR I5(23) O5 (63)
STR I1A (36)
STR
RHY4 I4 (33) O4 (31)
VR20
UPPER
MR
LOWER (same as upper manual)
PEDAL
SOLO
SR
RHYTHM

1-6) Other Checks

1. Sub Oscillator Function

Observation Point: One of the MU, ML and MS V1 terminals

Waveform: Corresponds to the waveforms shown on the function switch

	3Vp-p duty ratio 50%	Center 0V ± 0.1V
	3Vp-p	– do. –
	– do. –	– do. –
	– do. –	– do. –
	– do. –	– do. –

Conditions: Each VCO lever: "3"

2. Tuning variation limits for upper, lower, pedal and solo: Center value ± 100 cent.

3. Wave motion variation limits for upper, lower and pedal: Center value ± 20 cent.

1-7) Various Lever Functions

1. Pitch Bend U, L, P	When the key goes on, an immediate one-octave pitch rise is followed by a fall to the pitch of the pushed key. Time: 10mSec
2. Coupler L to U	Voices set on the lower manual are played on the upper manual keys. Check for same intervals at corresponding manual points.
U to L	Voices set on the upper manual are played on the lower manual keys.
L to P	Voices set on the lower manual are played by the pedals. It is possible to have both pedal and lower manual tones sound in unison when a pedal is pressed. In this case the lower manual tone will be one octave higher than the pedal tone.
S to U	Voices set on the solo manual are played by the upper manual keys. Upper manual C3 corresponds to solo C3, but solo takes priority over upper.
3. Sustain	Sustain time: 4.0 sec. Volume and tone color should change together (when IL is set according to tone module).
4. Preset Tone Selector	No difference in tone color should be heard among 1-10. Check left-right separation when more than two lights are lit. Left: Line I Right: Line II Solo: one light only.
5. Volume	Variation amount: "1" should be 20dB lower than "3".
6. Brilliance	In comparison with "C", "0" and "3" change the VCF cutoff by −2.5 octaves to +2.5 octaves from the HF and LF standard value in accordance with the tone module.
7. Resonance	In comparison with "0", "3" raises the VCF Q + 15 from the HQ and LQ standard value in accordance with the tone module.

8. Mixing

At "C" channel I and II are the same level.
At "0" channel I is unchanged from "C", but channel II is a continuous –60dB lower than the condition of "C".
At "3" channel I is a continuous –60dB lower than the condition of "C", but II is unchanged from "C".

9. Reverb

See previous level setting.
In comparison with "3", "0" should be at least 60dB lower.

10. Master Volume

*In comparison with "3", "0" should be 20dB ± 2dB lower.
*According to master volume setting at "2" or tone cabinet selector switch at "3".

11. Sample Hold

*When the rhythm section is being used, the lamp for the appropriate instrument pattern lights.

12. S/H VCF

*When the rhythm section is being used, the solo keyboard tones are changed according to the S/H lamp cycle. The depth of this change is random; maximum depth is ± 5 octaves (note: operates only when S/H switch is on).

13. S/H VCO

*When the rhythm section is being used, the solo keyboard tones are changed according to the S/H lamp cycle. The depth of this change is random; maximum depth is ± 500 cent (note: operates only when S/H switch is on).
*This also pertains to the following section.

14. S/H Switch

*When the rhythm section is being used, the solo keyboard tones sound according to the lamp cycle. Solo keyboard pitches are sounded at random intervals. These intervals fall within a moving tone area which is decided by the S/H VCO lever. When the lever is set to "3" the maximum range for these intervals of four octaves is obtained.

15. Ring Modulator

MODULATION At "0" the solo tone does not pass via the ring modulator.
At "3" the solo tone passes only through the ring modulator.
Between "0" and "3" the two types are continuously mixed.
This also pertains to the following section.

NOISE LEVEL Solo tones undergo ring modulation using noise.

NOISE COLOR *The above noise element is changed by a random signal with an approximate 10Hz cycle when the setting is "0", and with a 10KHz cycle when the setting is "3".

OSC LEVEL The solo tone undergoes ring modulation using a ⟋ waveform.

OSC SPEED *The above cycle is changed between 1.7 and 28Hz.

KEYBOARD According to the above cycle as set by the OSC speed value:
a) There is no change when the solo key C3 is pressed.
b) There is a one-octave rise when solo key C4 is pressed.
c) There is a three-octave rise when solo key C6 is pressed.
The above changes (a) – (c) are continuous.
The value is held even when the key is off.

*With regard to the ring modulator:
This modulator can be thought of as two units in parallel. For example, if two signals, A and B, modulate each other but only output from one is desired, the modulated waveform becomes that shown in line 1 of Fig. A: a DSD wave with no carrier.

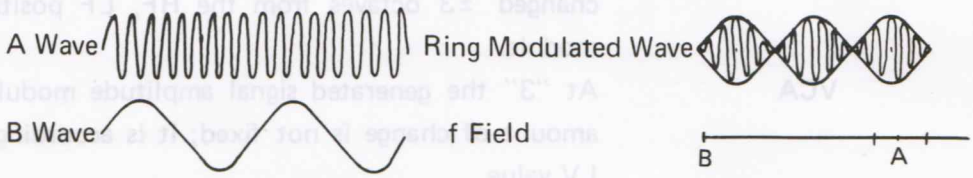

In the GX-1 the A wave is the solo signal.
The B wave corresponds to OSC and Noise.

16. Envelope

ATTACK *Set at "0" there is no change. At "3" it speeds up the rise times of the EG, VCF and VCA set by the tone module, by a value of 1,000. However, shortest rise time is 1m Sec.

SUSTAIN *Set at "3", the tone color and volume change together within four seconds.

17. Pitch Envelope

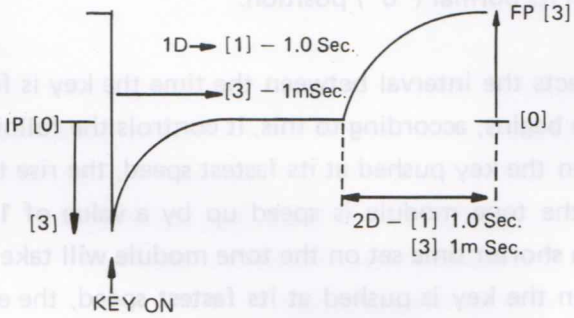

* The above has a general overall connection with IP, 1D and 2D, EP. Check the figure to the left.

18. Solo Brilliance With respect to "C", "0" and "3" change the VCF cutoff by –2.5 and +2.5 octaves from the standard value of HF, LF, according to the tone module.

19. Solo Resonance In comparison to the "0" setting, "3" raises the Q of the VCF by +15 from the standard value of HQ, LQ, according to the tone module.

20. Solo Sub Oscillator

VCO At "3" the generated signal frequency is changed by ±20 cent with the cycle set by Speed.

VCF At "3" the generated signal tone color is changed. The VCF cutoff is

	changed ±3 octaves from the HF, LF position set by the tone module.
VCA	At "3" the generated signal amplitude modulation changes. This amount of change is not fixed; it is according to the tone module LV value.
SPEED	At "0": 1.7Hz; at "C": 7Hz; at "3": 28Hz
FUNCTION	See p. 21.
21. Solo Portamento	Set at "3", if the keyboard low range and high range are pressed in turn, the oscillation speed of pitch change should be over 2.0 sec; this speed has no relation to the intervals between the points at which the keyboard is pressed.
22. Knee Control PORTAMENTO	With the solo portamento set at "3" and the tablet at "1", the portamento effect should be heard when the knee lever is pushed to "3" from its normal ("0") position.
23. Solo Touch Response 1st Touch	Detects the interval between the time the key is first pressed and the tone begins; according to this, it controls the following effects.
ATTACK	When the key pushed at its fastest speed, the rise time of the tone set on the tone module is speed up by a value of 1,000. However, an even shorter time set on the tone module will take priority.
INITIAL PITCH	When the key is pushed at its fastest speed, the effect is the same as setting the solo pitch envelope generator (panel 2) IP lever to "3".
24. Second Touch	Detects the lowering of the key when it touches the stopper after the note is begun, then adds the following effects:
PITCH	At "3": over +500 cent
BRILLIANCE	At "3": +2 oct. from the position set by the tone module.
LEVEL	At "0": within −3dB of Normal level At "3": within +3dB of Normal level
SPEED	At "0": 1.7Hz; at "3": 28Hz. At this time the continuous control panel 2 sub oscillator speed is cancelled.

VCO	At "3" the generated signal frequency is more than +15, –5 cent; the cycle is set by the panel 2 sub oscillator speed. The panel 2 sub oscillator VCO is cancelled.
VCF	At "3" the generated signal tone color is modulated. The VCF 3-octave movement cycle is the same as for the VCO. The panel 2 sub oscillator VCF is cancelled.

25. Third Touch

VIBRATO	Turned maximum left-right pitch change is more than ±20 cent.
WAH WAH	Turned maximum left-right tone color modulation and VCF movement is ±1.5 oct.
RESONANCE	Turned maximum left-right, VCF Q change is 0 to +5.

26. Upper Touch Response

VIBRATO	Turned maximum left-right, pitch change is ±20 cent.
WAH WAH	Turned maximum left-right, tone color modulation and VCF movement is ±3 octaves.
RESONANCE	Turned maximum left-right, VCF Q change is 0 to +5.

27. Noise — For the modulations shown below, random signals are generated:

VCF	Centered around the high pass filter and low pass filter cut off frequence set by the tone module, maximum random variation is ±2.5 octave.
VCO	The sound source is frequency modulated at random. Maximum modulation is ±50 cent.

COLOR	The random noise cycle for the above VCF and VCO is changed: At "0" it is 10Hz; at "3" it is 10KHz.

28. Upper Manual Sub Oscillator

VCO	At "3" the sound source frequency modulation is ±20 cent; the cycle is controlled by the speed setting.
VCF	At "3" the sound source tone color is modulated; the VCF cutoff frequency is changed to ±3 octaves from the high pass filter and low pass filter positions set on the tone module.
VCA	At "3" the degree of AM modulation is set by the individual tone module level control.
SPEED	See the above section.
FUNCTION	See the above section.
KEYBOARD	Modulation speed is controlled not only by the speed lever, but also by the solo keys; the higher the key, the faster the modulation speed. In addition, pressing the solo keys also varies the VCO effect: pressing C3 provides no change, while C6 gives a three-octave rise.

29. Upper Portamento — When set at "3", with the C1 and C6 positions pressed in turn, variation speed should be more than 1.5 sec.

30. Knee Control

UPPER PORTAMENTO	With upper portamento set to "3" and the tablet to "1", there is no portamento effect. If the knee lever is then set to "3", the portamento effect is heard.
UPPER SUSTAIN	With the panel 1 upper sustain set to "3" and the tablet to "1", there is no sustain effect. If the knee lever is then set to "3", the sustain effect is heard.

VCO *With the tablet set to "1" and the knee lever to "3", sound source frequency variation should be ±20 cent.
*The panel 4 sub oscillator VCO lever is cancelled.

VCF *With the tablet set to "1" and the knee lever to "3", sound source tone color is modulated by ±3 octaves from the VCF high pass filter and low pass filter positions set on the tone module.
*The panel 4 sub oscillator VCF lever is cancelled.

VCA *With the tablet set to "1" and the knee lever set to "3", the sound source is amplitude modulated.
*The panel 4 sub oscillator VCA lever is cancelled.

SPEED *With the tablet set at "1" and the knee lever at "0", the upper manual sub oscillator speed is 1.7Hz.
*With the tablet set at "1" and the knee lever at "3", the upper manual sub oscillator speed is 28Hz.
Control is continuous between the two above points.
*The panel 4 sub oscillator speed lever is cancelled.

31. Lower Manual
SUB OSCILLATOR All function are the same as section 27 above.

32. Manual Balance Compared with the center position:
"1" provides +2dB upper, –1dB lower;
"3" provides –1dB upper, +2dB lower.

33. Lower Manual
KNEE LEVER
CONTROL Same as section 29 above, except for the portamento effect.

34. Foot Switch

SUB OSCILLATOR CANCEL UPPER

*With the foot switch selector switch at "1", when the foot switch is set from "0" to "1" the lamp lights.

*With the lamp lit, panel 4 sub oscillator VCF, VCA, VCO are all on and panel 5 VCF, VCA, VCO and speed tablets are all off.

*With the switch at "1", the lamp can be switched on and off by the foot switch.

*When the switch is at "0", the lamp is off.

LOWER

*Works the same as the above, except that it affects the panel 6 and 7 levers and tablets.

RHYTHM STOP

*When the rhythm section is being used and the foot selector switch for rhythm is at "1", moving the foot switch from "0" to "1" will stop the rhythm.

*The foot switch can be used to push for on, push again for off.

SOLO PORTAMENTO

*With the foot selector switch for solo portamento set at "1" and the panel 3 solo portamento lever at "3", when the solo keyboard C3 and C6 are pressed in turn, no effect will be heard if the foot switch is at "0". But once it is set to "1", the portamento effect will be heard. The position of the panel 3 solo portamento knee lever tablet ("0" or "1") has no effect in this case.

UPPER PORTAMENTO — With this switch set at "1" and the panel 5 upper portamento lever at "3", when the upper manual C1 and C6 are pressed in turn, no effect will be heard if the foot switch is at "0". But once it is set to "1", the portamento effect will be heard. The position of the panel 5 upper portamento knee lever tablet ("0" or "1") has no effect in this case.

35. Over Tone Presets — When any of the buttons 1-4 are pressed, the button lamp lights. Pressing C button cancels the lit lamp.

*Buttons 1-3 call forth the preset controls on the pull-out board. When any of the buttons is lit, the panel 1 over tone is cancelled, and the over tones are then controlled by the setting of the appropriate board levers.

*Button 4 controls a preset configuration which is factory set according to the following chart:

UI	1
UII	2
LI	4
LII	2
PI	2
PII	1

36. Over Tone Switch Center Blank — *If any over tone switch lever on panel 1 or panel 8 is set at a position other than a click stop, it has the same effect as being set at stop "2".

37. Solo Keys and Portamento Strip — *Both sections use the same tone generators.

*If both are pressed at once, portamento takes precedence over solo.

*The pitch at the same location on both sections should be within ±75 cent.

38. Expression Pedal Dynamic Compressor — When any of these button is at "1", compared to the volume when it is at "0", the level should be:
0 ± 2dB when the expression pedal is at maximum:
+20 ± 3dB when the expression pedal is at minimum.

39. Output Level — For upper, lower, general and 5-channel outputs, see section 1.5.

40. Tone Cabinet Selector Switch — At "1":
Upper, lower, pedal, solo and rhythm are all fed through the General socket.
The upper signal is fed through the Upper socket.
The lower signal is fed through the Lower socket.
At "2":
The upper, pedal, solo and rhythm signals are fed through the Upper socket.
The lower, pedal, solo and rhythm signals are fed through the Lower socket.
The pedal, solo and rhythm signals are fed through the General socket.
At "3":
The upper signal is fed through the Upper socket.
The lower signal is fed through the Lower socket.
The pedal, solo and rhythm signals are fed through the General socket.

41. External Reverb Connector Jack — When an external reverb unit is connected to this jack, the built-in reverb section is cut off and control passes to the external unit.

GX-1 Parts List

YAMAHA Electone ORGAN

GX-1
PARTS LIST

CONTENTS (目次)

1. Circuit Board & Components (シート及びシート部品) 1

2. Manual Keyboard & Components (鍵盤、拍子木関係部品) 8

3. Pedal Keyboard & Components (ペダル鍵盤関係部品) 13

4. Knee Lever, Touch Vibrato, Expression Pedal, Reverb Unit & Tone Cabinet Connector (ニーレバーその他) ... 14

5. Power Supply (電源関係) 15

6. Cabinet (外装関係部品) 16

7. Rack Supporter & Connector 17

1. Circuit board & Components (シート及びシート部品)

Circuit Board Layout

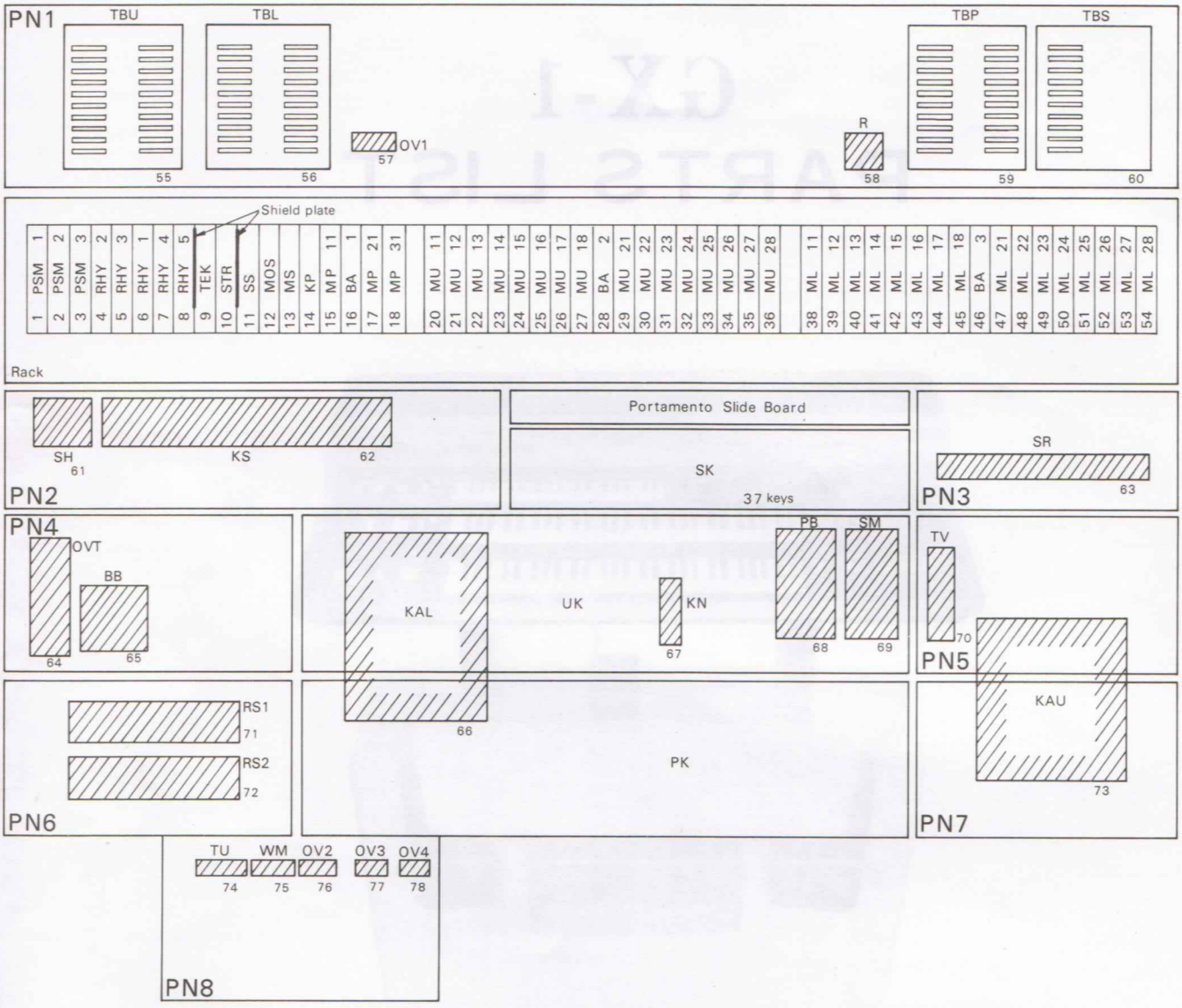

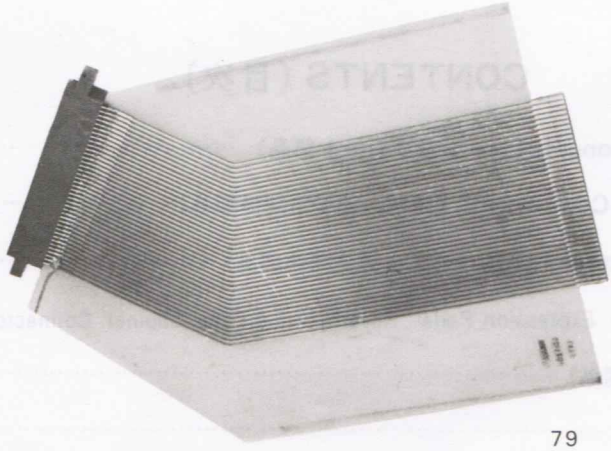

Ref No.	Part No.	Description (部 品 名)				Remarks	Substitution
		Circuit Board			シート		
20~27 38~45	30 10 00 NA 02 87 50	MU I、ML I circuit Board		#15996	MU I・ML I シート	For servicing MU II・ML II	
29~36 47~54	30 10 00 NA 03 33 70	MU II、ML II	—do.—		MU II・ML II 〃		
15	30 10 00 NA 02 87 90	MP I	—do.—		MP I 〃	For servicing MU II・ML II	
17,18	30 10 00 NA 03 33 80	MP II	—do.—		MP II 〃	—do.—	
13	30 10 00 NA 02 88 10	MS	—do.—		M S 〃		
16,28, 46,	30 10 00 NA 02 88 30	BA	—do.—	#15903	B A 〃		
14	30 10 00 NA 03 32 10	KP	—do.—	#18861	K P 〃		
9	30 10 00 NA 02 88 50	TEK	—do.—	#15835	T E K 〃		
10	30 10 00 NA 02 88 60	STR	—do.—	#15865	S T R 〃		
11	30 10 00 NA 02 88 70	SS	—do.—	#15857	S S 〃		
12	30 10 00 NA 02 88 80	MOS	—do.—	#16434	MOS 〃		
1,2,3,	30 10 00 NA 02 88 90	PSM	—do.—	#15874	P S M 〃		
6	30 10 00 NA 02 89 00	RHY-1	—do.—	#15828	RHY-1 〃		
4	30 10 00 NA 02 89 10	RHY-2	—do.—	#15803	RHY-2 〃		
5	30 10 00 NA 02 89 20	RHY-3	—do.—	#15813	RHY-3 〃		
7	30 10 00 NA 02 89 30	RHY-4	—do.—	#15793	RHY-4 〃		
8	30 10 00 NA 02 89 40	RHY-5	—do.—	#15786	RHY-5 〃		
62	30 10 00 NA 02 89 50	KS	—do.—	#15957	K S 〃		
69	30 10 00 NA 02 89 60	SM	—do.—	#15763	S M 〃		
68	30 10 00 NA 02 89 70	PB	—do.—	#15923	P B 〃		
68	30 10 00 NA 02 89 70	New PB	—do.—	#15924	新P B 〃	for product after Serial No.5074 (included Random effect circuit)	
64	30 10 00 NA 02 89 80	OVT	—do.—	#16453	OUT 〃		
63	30 10 00 NA 02 89 90	SR	—do.—	#15934	S R 〃		
57,76 77,78	30 10 00 NA 02 90 20	OV	—do.—	#16481	O V 〃		
55,56 59,60	30 10 00 NA 02 90 40	TBU (TBL,TBP)	—do.—	#15775	TB・U・L・P 〃		
60	30 10 00 NA 02 90 50	TBS	—do.—	#15775	TBS 〃	For servicing, TBU	
70	30 10 00 NA 02 90 80	TV	—do.—	#17181	T V 〃		
61	30 10 00 NA 02 91 70	SH	—do.—	#16005	S H 〃		
65	30 10 00 NA 02 95 80	BB	—do.—	#16871	B B 〃		
66,73	30 10 00 NA 03 31 80	KAS	—do.—	#17854	KAS 〃	This C.board is available for KAU or KUL C.board (Servicing)	
79	30 10 00 NA 03 03 00	AT	—do.—	#17201	A T 〃	Extention circuit board for Servicework.	
	30 10 00 NA 03 17 00	PU	—do.—	#17940	電源回路P U シート	Power Supply	

1

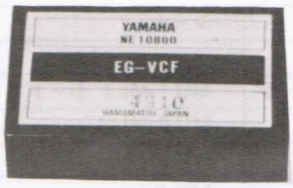

2

3

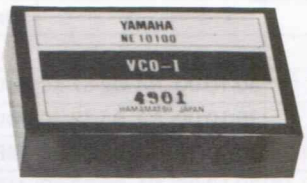

4

5

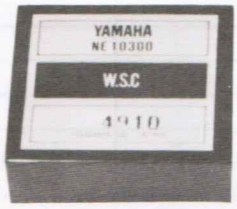

6

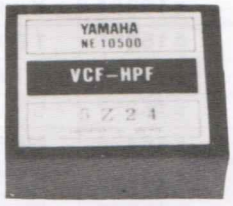

7

8

9

modules

Ref. No.	Part No.	Description (部品名)		Remarks	Substitution
		Module	モジュール		
5	30 10 00 NE 11 50 00	VCO III module	VCOIII モジュール	M circuit board	
4	30 10 00 NE 10 10 00	VCO I —do.—	VCO I 〃	SS.MOS Circuit board	
6	30 10 00 NE 10 30 00	WSC —do.—	WSC 〃	M,SS.MOS Circuit board	
8	30 10 00 NE 10 40 00	VCF-LPF —do.—	VCF-LPF 〃	M Circuit board	
7	30 10 00 NE 10 50 00	VCF-HPF —do.—	VCF-HPF 〃	—do.—	
2	30 10 00 NE 10 80 00	EG-VCF —do.—	EG-VCF 〃	—do.—	
1	30 10 00 NE 10 90 00	EG-VCA —do.—	EG-VCA 〃	—do.—	
9	30 10 00 NE 11 00 00	VCF-BPF —do.—	VCF-BPF 〃	—do.—	
3	30 10 00 NE 11 10 00	VCO-EG II —do.—	VCO-EG II 〃	STR Circuit board	
		Integrated Circuit (IC)	IC		
	40 10 00 i G 00 01 80	SN7400N (T.T.L)	〃	SS,MOS,RHY5 C,board	
	40 10 00 i G 00 02 70	SN7473N (—do.—)	〃	SS C,board	
	40 10 00 i G 00 04 30	SN74164N (—do.—)	〃	SS,RHY5 C,board	
	40 10 00 i G 00 11 70	TC4001P (C-Mos)	〃	PSM,SM,KAS C,board	CD4001AE
	40 10 00 i G 00 11 80	TC4013P (—do.—)	〃	KAS C,board	CD4013AE
	40 10 00 i G 00 11 90	TC4015P (—do.—)	〃	—do.—	CD4015AE
	40 10 00 i G 00 16 90	TC4016P (—do.—)	〃	PSM,KAS C,board	CD4016AE
	40 10 00 i G 00 06 70	CD4025AE (—do.—)	〃	PSM,SM C,board	TC4025P
	40 10 00 i G 00 12 60	TC4049P (—do.—)	〃	PSM,KAS C,board	CD4049AE
	40 10 00 i G 00 17 70	TC4051P (—do.—)	〃	KAS C,board	CD4051AE
	40 10 00 i G 00 17 20	TC4069P (—do.—)	〃		MM74C04
	40 10 00 i G 00 17 60	TC4081P (—do.—)	〃	KAS C,board	CD4081AE
	40 10 00 i G 00 10 10	MC14035CP (—do.—)	〃		CD4035AE TC4035P
	40 10 00 i G 00 04 50	MM3302P (—do.—)	〃	RHY5, C,board	
	40 10 00 YM 22 30 10	YM2230 (—do.—)	LSI	KAS C,board	
	40 10 00 YM 22 40 10	YM2240 (—do.—)	〃	KAS C,board	
	40 10 00 i G 00 01 50	AN374 (liner amp)	IC	STR,MOS C,board	
	40 10 00 i G 00 12 10	LM310H (OP amp.)	〃	KAS C,board	

Ref. No.	Part No.	Description (部品名)		Remarks	Substitution
	40 10 00 i G 00 10 00	LM302H (OP Amp.)	IC	KAS C,board for servicing LM310H	
	40 10 00 i G 00 10 40	TA7504M (OP Amp.)	〃	M,TEK,SS,KS,PB,KP, STR, MOS,etc,C,board	
	40 10 00 i G 00 13 90	NJM4558 (−do.−)	〃	TEK,PB C,board	RC4558
	40 10 00 i G 00 04 40	BA301 (OP Amp)	〃	TEK,STR C,board	
	40 10 00 i G 00 03 60	CA3080 (VCA)	〃	M,TEK,RHY5 C,board	
	40 10 00 i G 00 03 60	μPC141A (DC regulator)	〃	PU C,board	
		Transistor	トランジスター		
	40 10 00 i A 04 90 10	2SA490 (Y)	〃		
	40 10 00 i A 05 61 70	2SA561 (Y)	〃		
	40 10 00 i C 04 58 30	2SC458 (C)	〃		
	40 10 00 i Z 00 00 20	2SC458LG(D)(Pair)	〃	STR C,board	
	40 10 00 i C 05 09 20	2SC509 (Y)	〃		
	40 10 00 i C 07 35 20	2SC735 (Y)	〃		
	40 10 00 i D 02 12 00	2SD212	〃	DC Supply	
	40 10 00 i D 02 34 20	2SD234 (Y)	〃		
	40 10 00 i D 02 35 10	2SD235	〃		
		Diode	ダイオード		
	40 10 00 i F 00 00 40	1S1555	〃		
	40 10 00 i F 00 00 70	1S2473 (VE)	〃		
	40 10 00 i F 00 01 00	1S1715	〃		
	40 10 00 i F 00 04 20	02Z5-6A	〃		
	40 10 00 i F 00 05 10	02Z-10A	〃		
	40 10 00 i H 00 00 80	10DC-1	〃	DC Supply	10D-4
	40 10 00 i H 00 00 90	10DC-1R	〃	−do.−	10DC-4
	40 10 00 i H 00 03 60	12CC-12	〃	−do.−	
		FET	FET		
	40 10 00 i E 00 00 10	2SK30A (Y)	〃		
	40 10 00 i E 00 00 80	AD0042 (dual FET)	〃	KAS C,board	

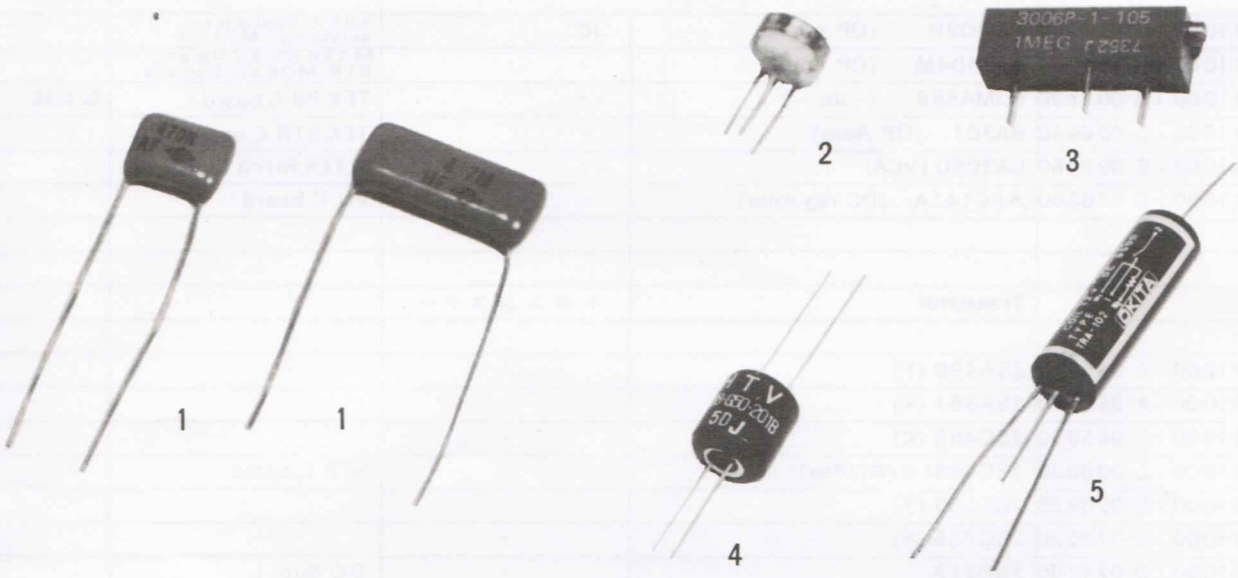

Ref. No.	Part No.	Description (部品名)			Remarks	Substitution
		Metal Film Resistor				
1	40 10 00 HU 89 41 00	10Ω	± 0.1%	1/4P		
1	40 10 00 HU 89 51 00	100Ω	−do.−	−do.−		
1	40 10 00 HU 89 61 00	1kΩ	−do.−	−do.−		
1	40 10 00 HU 89 62 00	2kΩ	−do.−	−do.−		
1	40 10 00 HU 89 63 00	3kΩ	−do.−	−do.−		
1	40 10 00 HZ 00 07 50	29.94kΩ	−do.−	−do.−		
1	40 10 00 HU 89 65 00	5kΩ	−do.−	−do.−		
1	40 10 00 HU 87 65 60	5.6kΩ	± 1%	−do.−		
1	40 10 00 HU 87 66 80	6.8kΩ	−do.−	−do.−		
1	40 10 00 HU 87 68 20	8.2kΩ	−do.−	−do.−		
1	40 10 00 HU 87 71 00	10kΩ	−do.−	−do.−		
1	40 10 00 HU 87 72 20	22kΩ	−do.−	−do.−		
1	40 10 00 HU 87 75 60	56kΩ	−do.−	−do.−		
1	40 10 00 HU 87 76 80	68kΩ	−do.−	−do.−		
1	40 10 00 HU 87 78 20	82kΩ	−do.−	−do.−		
1	40 10 00 HU 87 81 20	120kΩ	−do.−	−do.−		
1	40 10 00 HU 87 81 50	150kΩ	−do.−	−do.−		
1	40 10 00 HU 87 84 70	470kΩ	−do.−	−do.−		
		Solid Resistor		ソリッド抵抗		
	40 10 00 Hi 20 92 20	2.2MΩ	±10%	1/4P		
	40 10 00 Hi 20 99 90	10MΩ	−do.−	−do.−		
		Cement Resistor		セメント抵抗		
	40 10 00 HM 55 24 70	0.47Ω	5W			
	40 10 00 HM 55 25 60	0.56Ω	−do.−			

Ref. No.	Part No.	Description (部品名)		Remarks	Substitution
	40 10 00 HL 31 31 00	Metal Oxide Resistor 1Ω 1W	酸化金属抵抗		
	40 10 00 HL 31 41 00	—do.— 10Ω —do.—	〃		
	40 10 00 HL 31 55 60	—do.— 560Ω—do.—	〃		
		Variable Resistor	可変抵抗器		
2	40 10 00 HT 56 01 40	B-10Ω (3321H type)	〃		
2	40 10 00 HT 56 01 50	B-20Ω —do.—	〃		
2	40 10 00 HT 56 00 00	B-50Ω —do.—	〃		
2	40 10 00 HT 56 00 10	B-100Ω —do.—	〃		
2	40 10 00 HT 56 00 20	B-200Ω —do.—	〃		
2	40 10 00 HT 56 00 30	B-500Ω —do.—	〃		
2	40 10 00 HT 56 00 40	B-1kΩ —do.—	〃		
2	40 10 00 HT 56 00 50	B-2kΩ —do.—	〃		
2	40 10 00 HT 56 00 60	B-5kΩ —do.—	〃		
2	40 10 00 HT 56 00 70	B-10kΩ —do.—	〃		
2	40 10 00 HT 56 00 80	B-20kΩ —do.—	〃		
2	40 10 00 HT 56 00 90	B-50kΩ —do.—	〃		
2	40 10 00 HT 56 01 00	B-100kΩ —do.—	〃		
2	40 10 00 HT 56 01 10	B-200kΩ —do.—	〃		
2	40 10 00 HT 56 01 30	B-1MΩ —do.—	〃		
3	40 10 00 HT 55 00 40	B-1kΩ (Trim-pot type 3006P)	〃	for Tuning VR,M C,board	
•		**Tantalum Capacitor**	タンタルコンデンサ		
	40 10 00 FP 13 71 00	10μF/16V			
	40 10 00 FP 14 61 00	1μF/25V			
	40 10 00 FP 15 61 00	1μF/35V			
	40 10 00 FP 15 71 00	10μF/35V			
		Ceramic Capacitor	セラミックコンデンサ		
	40 10 00 FG 11 11 20	12pF			
	40 10 00 FG 11 12 20	22pF			
	40 10 00 FG 11 12 70	27pF			
	40 10 00 FG 11 13 30	33pF			
	40 10 00 FG 11 13 90	39pF			
	40 10 00 FG 11 14 70	47pF			
	40 10 00 FG 11 21 00	100pF			
	40 10 00 FG 11 21 80	180pF			
	40 10 00 FG 11 22 20	220pF			
	40 10 00 FG 11 23 90	390pF			
	40 10 00 FG 11 31 00	1000pF			
	40 10 00 FG 11 32 20	2200pF			
		Polystyren Capasitor	スチロールコンデンサ		
	40 10 00 FD 15 31 50	1500pF 50V	〃	MP C,board	
	40 10 00 FD 15 38 20	8200pF —do.—	〃	Whole M C.board	

Ref. No.	Part No.	Description (部品名)		Remarks	Substitution
	40 10 00 FD 15 45 60	56000pF —do.—	〃	MP C,board	
		Solid Aluminum Capacitor	ソリッドアルミコンデンサ		
	40 10 00 FN 13 54 70	0.47μF 16V			
	40 10 00 FN 13 63 30	3.3μF —do.—			FP15633
	40 10 00 FN 14 54 70	0.47μF 25V			FP15547
		Photo Coupler	フォトカプラー		
4	40 10 00 iK 00 01 10	P588-G50-201B	〃	KAS C,board	
4	40 10 00 iK 00 01 40	〃 〃 368A	〃	TEK C,board	
		Lead Relay	リードリレー		
5	40 10 00 KC 00 01 40	TRA-102	〃	M,TEK C,board	
		Filter Coil	フィルターコイル		
	40 10 00 GB 05 41 00	GB5410	〃		
		Choke Coil	チョークコイル		
	40 10 00 GA 00 09 60	GA0096	〃		
6	30 10 00 BB 03 75 00	Shutter plate for Solo 2nd touch sensor	2ndタッチシャッター板		
	30 10 00 BB 00 37 60	—do.— for Solo 3rd touch sensor	3rdタッチシャッター板		

2. Manual Keyboard & Components (鍵盤、拍子木関係部品)

Ref. No.	Part No.	Description (部品名)		Remarks	Substitution
		Solo Keyboard			
	30 10 00 NB 03 21 70	Solo Keyboard Assembly	ソロ鍵盤 Assy		
	30 10 00 NB 03 21 80	Switch Assembly 6 Keys	スイッチAssy 6keys		
	30 10 00 NB 03 21 90	1 Key	〃 1key		
	30 10 00 CB 02 42 10	White Key C	白鍵 C		
	30 10 00 CB 02 42 20	—do.— D	〃 D		
	30 10 00 CB 02 42 30	—do.— E	〃 E		
	30 10 00 CB 02 42 40	—do.— F	〃 F		
	30 10 00 CB 02 42 50	—do.— G	〃 G		
	30 10 00 CB 02 42 60	—do.— A	〃 A		
	30 10 00 CB 02 42 70	—do.— B	〃 B		
	30 10 00 CB 02 42 80	—do.— C′	〃 C′		
	30 10 00 CB 02 42 90	Black Key	黒鍵		
	30 10 00 AA 03 09 60	Key-spring (White Key)	キースプリング白鍵用		
	30 10 00 AA 03 09 70	—do.— (Black Key)	〃 黒鍵用		
	30 10 00 NB 03 72 40	Upper Key Switch Assembly 1U	スイッチアッセンブリ		
	30 10 00 NB 03 72 50	—do.— 2U	〃		
	30 10 00 NB 03 72 60	—do.— 3U~5U	〃		
	30 10 00 NB 03 35 10	Lower Key Switch Assembly 1U	スイッチアッセンブリ		
	30 10 00 NB 03 35 20	—do.— 2U~5U	〃		
	30 10 00 NB 02 84 80	White Key Assembly C,F	キーアッセンブリ C,F		
	30 10 00 NB 02 84 90	—do.— D	〃 D		
	30 10 00 NB 02 85 00	—do.— E,B	〃 E,B		
	30 10 00 NB 02 85 10	—do.— G	〃 G		
	30 10 00 NB 02 85 20	Key Assembly A	キーアッセンブリ A		
	30 10 00 NB 02 85 30	—do.— C′	〃 C′		
	30 10 00 NB 02 85 40	—do.— Black key	〃 黒鍵		
	30 10 00 CB 00 28 20	White Key C,F	白鍵 C,F		
	30 10 00 CB 00 28 30	—do.— D	〃 D		
	30 10 00 CB 00 28 40	—do.— E,B	〃 E,B		
	30 10 00 CB 00 28 50	—do.— G	〃 G		
	30 10 00 CB 00 28 60	—do.— A	〃 A		
	30 10 00 CB 00 28 70	—do.— C′	〃 C′		
	30 10 00 CB 00 28 80	Black Key	黒鍵		

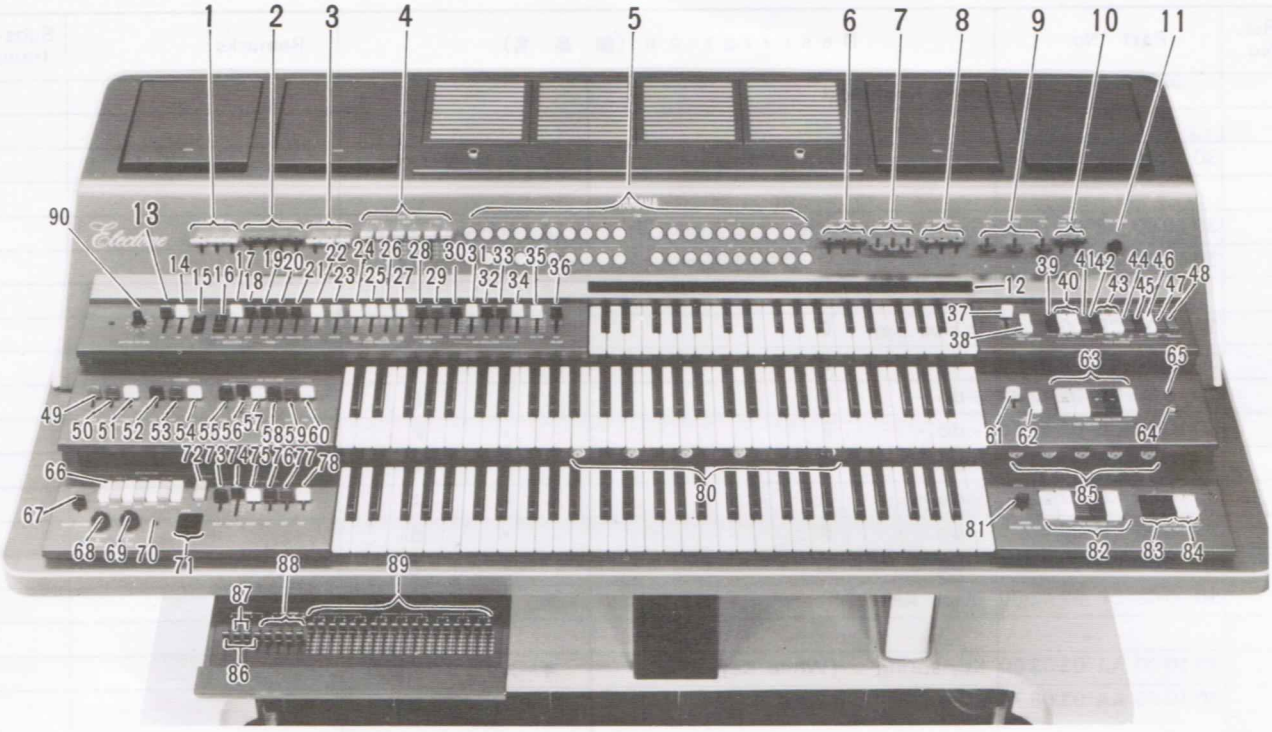

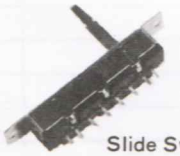

Slide Switch

Slide Switch
98

See-Saw Switch

Rotary Switch

Lever Switch

Initial Clear
button Switch
97

Power Switch

Variable-resistor (300°)

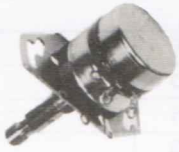

Slide variable
resistor (Slide VR)

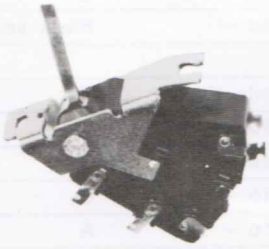

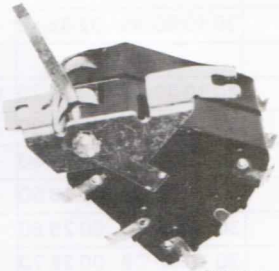

(B10K×2)

Tone Volume (TVR)

Knob

92

93

94

95

Tone selector
Switch with Lamp
5

Pilot lamp (with lead wire)

96

Ref. No.	Part No.	Description (部品名)		Remarks	Substitution
		Panel 1			
1,2	40 10 00 KA 20 00 00	Lever Switch	レバーSW (ピッチベンド用 カプラー)	Pitch Bend,Coupler	
4	40 10 00 KA 40 02 90	Slide Switch	スライドスイッチ (オーバートーン用)	Overtone(U,L,P,SOLO)	
5	40 10 00 KA 90 00 80	Tone Selector Switch with Lamp	自照SW (プリセットセレクター)	Preset Selector	
6	40 10 00 HP 20 01 60	Tone volume (TVR) A-10K(Non click)	UK,LK,PK ボリウム用	UK,LK,PK Volume	
7	40 10 00 HP 20 01 40	—do.— B-10K(center click)	ブリリアンス用	Brilliance	
8,10	40 10 00 HP 20 00 50	—do.— B-10K (4 click stops)	レゾナンス、リバーブ用	Resonance,Reverb	
9	40 10 00 HP 20 01 20	—do.— B-10K×2(center click)	ミキシング用	Mixing	
3	40 10 00 HP 20 00 80	—do.— C-10K(4click stops)	サスティーン用	Sustain	
11	40 10 00 HP 20 00 20	Variable Resistor A10K(300°)	トータルVR	Total VR	
95	30 10 00 CB 01 67 80	TVR Knob (White)	TVRツマミ白		
95	30 10 00 CB 01 67 90	—do.— (Black)	〃 黒		
95	30 10 00 CB 01 68 00	—do.— (Red)	〃 赤		
95	30 10 00 CB 01 68 10	—do.— (Yellow)	〃 黄		
95	30 10 00 CB 01 68 20	—do.— (Green)	〃 緑		
95	30 10 00 CB 02 52 70	Slide Switch Knob (White)	スライドSW用ツマミ白		
95	30 10 00 CB 00 49 50	Variable Resistor Knob (Black)	トータルVR用ツマミ黒	Total VR	
12	30 10 00 NB 01 79 70	Portamento Slide-board Assembly	ポルタメントボードAss'y		
		Panel 2			
90	40 10 00 KA 50 04 90	Rotary Switch	ロータリーSW(リズムパターン)	Rhythm pattern Selector	
15,16	40 10 00 KA 10 00 90	See-Saw Switch (Black)	シーソーSW	SOLOS/H,RING MOD, -K,B SWITCH	
30,35	40 10 00 KA 40 02 90	Slide Switch	スライドSW(サブOSC,OVT)	Solo Sub OSC-Function, Solo Over Tone	
13,14 32,33,34 17,18,20 22,24~ 27,29	40 10 00 HQ 30 00 10	Slide Variable Resistor B-10K (Non-click)	スライドボリウム	SOLO S/H-VCO,VCF RING MOD-SPEED,LEVEL NOISE-LEVEL PITCH ENVELOPE IP,ID,FD,FP, ATTACK,RESONANCE SUB-OSC-VCA,VCF,VCO	
19	40 10 00 HQ 30 01 30	—do.— C-500K (Non-click)	リングモジュレーター(カラー)	Ring Mod.-Color	
28,31	40 10 00 HQ 30 00 20	—do.— B-10K(Center click)	ブリリアンス、SUB,OSC スピード用	Brilliance,Sub OSC speed	
21	40 10 00 HQ 30 00 40	—do.— B-10K×2(Non-click)	リングモジュレーション	RING MOD-Normal -Mod.	
23,36	40 10 00 HQ 30 00 70	—do.— A-10K(Non-click)	ソロボリウム、サスティン	Solo Volume, Solo Sustain	
93	30 10 00 CB 02 52 70	Slide SW and Slide VR Knob (white)	ツマミ白		
93	30 10 00 CB 02 52 80	—do.— (Black)	〃 黒		
93	30 10 00 CB 02 52 90	—do.— (Red)	〃 赤		
93	30 10 00 CB 03 53 00	—do.— (Yellow)	〃 黄		
93	30 10 00 CB 03 53 10	—do.— (Green)	〃 緑		
	30 10 00 CB 00 49 50	Rotary Switch Knob (Black)	〃 黒		
96	40 10 00 JB 00 00 70	Pilot Lamp 12V30mA (with lead wire)	パイロットランプ	Solo S/H Rhythm Pattern Indicator	
		Panel 3			
37	40 10 00 HQ 30 01 90	Slide Variable Resistor C-2M(Non-click)	スライドVR	PORTAMENTO	
38,40, 43,46	40 10 00 KA 10 02 90	See-Saw Switch (white)	シーソーSW 白	PORTAMENTO-KNEE SELECTOR,1st Touch-I,PITCH,2nd TOUCH-PITCH,SPEED,VCO 3rd TOUCH-VIBRATO	
39,42, 45,	40 10 00 KA 10 00 90	—do.— (Black)	〃 黒	1st TOUCH-ATTACK,2nd TOUCH-VOLUME,VCA	

Ref. No.	Part No.	Description (部品名)		Remarks	Substitution
48	40 10 00 KA 10 02 60	See-Saw Switch (Red)	シーソーSW 赤	3rd TOUCH-RESONANCE	
41,44 47	40 10 00 KA 10 02 80	–do.– (Green)	〃 緑	2nd TOUCH-BRILLIANCE, VCF,3rd TOUCH-WAH	
93	30 10 00 CB 02 52 70	Knob (White)	ツマミ 白	PORTAMENTO LENGTH	
		Panel 4			
54	40 10 00 HP 20 02 20	Tone Volume (TVR) C-500K (4 click stops)	ノイズ・カラー	NOISE-COLOR	
49,50, 51,52, 53,58, 59,60	40 10 00 HP 20 00 50	–do.– B-10K(–do.–)	サブ・オシレーター VCA,VCF,VCO他用	TOUCH RESPONSE-VIB, RESO,WAH, NOISE-VCF,VCO RANDOM-VCA,VCF,VCO SUB OSC-VCA,VCF,VCO	
55	40 10 00 KA 20 00 00	Lever Switch	レバーSW(ソロ追従)	Sub OSC-SOLO	
56	40 10 00 KA 40 02 90	Slide Switch (4 click stops)	スライドSW(ファンクション)	Sub OSC-FUNCTION	
57	40 10 00 HP 20 01 40	–do.– B-10K (Center click)	サブ・オシレーター スピード用	Sub OSC-SPEED	
93	30 10 00 CB 02 52 80	Knob (for Function) Black	ツマミ黒(ファンクション用)		
94	30 10 00 CB 01 68 80	TVR Knob White	ツマミ 白		
94	30 10 00 CB 01 68 90	–do.– Black	〃 黒		
94	30 10 00 CB 01 69 00	–do.– Red	〃 赤		
94	30 10 00 CB 01 69 20	–do.– Green	〃 緑		
		Panel 5			
63	30 10 00 NB 03 45 80	Tablet Assembly	タブレット Ass'y		
	30 10 00 NB 03 70 40	Tablet Switch Assembly	タブレットSW Ass'y		
61	40 10 00 HP 20 01 00	TVR C-100K (4 click stops)	トーンボリウム	UK PORTAMENTO	
62	40 10 00 KA 10 02 90	See-Saw Switch (White)	シーソーSW	UK PORTAMENTO-KNEE SELECTOR	
	40 10 00 KA 90 00 00	Power Switch	パワーSW		
93	30 10 00 CB 01 68 80	TVR Knob (White)	ツマミ(白)		
	40 10 00 JB 00 01 80	Neon Lamp	ネオンランプ	POWER Indicator	
65	30 10 00 CB 00 16 60	Pilot Lens (Red)	赤 玉		
		Panel 6			
67	40 10 00 HP 20 01 40	Tone Volume (TVR) B-10kΩ (center click)	イメージ・コントロール用	Imarge control, SUB OSC-SPEED	
76~78	40 10 00 HP 20 00 50	–do.– B-10kΩ (4 click stops)	サブオシレーター VCA,VCF,VCO用	SUB OSC-VCA,VCF, VCO	
68	40 10 00 HR 20 01 40	Variable Resistor B-2k×2+B-500k	リズムテンポ/スインガー	Rhythm Tempo/ Swinger	
69	40 10 00 HR 20 00 50	–do.– A-10k+B-10k	〃 バランス/ボリウム	〃 Balance/ Volume	
71	40 10 00 KA 10 00 90	See-Saw Switch (Black)	シーソーSW	START,SYNCHRO START	
73	40 10 00 KA 20 00 00	Lever Switch	ソロ(ソロ追従)用	Solo Speed	
74	40 10 00 KA 40 02 90	Slide Switch	ファンクション用	SUB OSC-FUNCTION	
93	30 10 00 CB 02 52 80	Knob (for Function)	ツマミ ファンクション用		
94	30 10 00 CB 01 68 80	–do.– (White)	〃 (白)		
94	30 10 00 CB 01 68 90	–do.– (Black)	〃 (黒)		
94	30 10 00 CB 01 69 20	–do.– (Green)	〃 (緑)		
	30 10 00 CB 01 91 30	–do.– (for Rhythm,core side)	〃 (リズム内側)		
	30 10 00 BA 00 40 70	–do.– (for Rhythm out side)	〃 (リズム外側)		
66	40 10 00 KA 70 04 00	Rhythm Selector Switch	リズムセレクター	Without Circuit board	
	40 10 00 LC 16 11 40	Circuit board,Rhythm Selector Switch	プリント基板		
	40,10 00 LC 16 12 40	–do,–	〃		
72	40 10 00 KA 70 05 30	VARIATION Switch	バリエーションSW		
96	40 10 00 JB 00 00 70	Pilot Lamp 12V30mA	パイロットランプ	Tempo Lamp	

Peda No.	Part No.	Description (部品名)		Remarks	Substitution
70	30 10 00 CB 01 25 50	Pilot Lens (Red)	パイロットレンズ赤	-do.-	
	30 10 00 CB 06 02 30	Rubber Bush	ゴムブッシュ	for fixing lamp	
		Panel 7			
82	30 10 00 NB 03 45 90	Tablet Assembly	タブレット Ass'y		
	30 10 00 NB 03 70 40	Tablet Switch Assembly	タブレットSWAss'y		
81	40 10 00 HP 20 02 40	Tone Volume (TVR) B-10K×2 (Non-click)	TVR B-10K	MANUAL BALANCE	
83	40 10 00 KA 10 00 90	See-Saw Switch (Black)	シーソーSW (黒)	FOOT SELECTOR-U.SUB OSC CANCEL,L SUB OSC CANCEL, RHYTHM STOP	
84	40 10 00 KA 10 02 90	-do.- (White)	〃 (白)	FOOT SELECTOR SOLO PORTAMENTO CANCEL U.PORTAMENTO CANCEL	
	30 10 00 CB 01 68 90	Knob (Black)	ツマミ黒	MANUAL BALANCE LEVER	
	40 10 00 JB 06 00 50	Pilot Lamp 12V30mA	パイロットランプ	FOOT SELECTOR	
	30 10 00 CB 01 25 50	Pilot Lens	パイロットレンズ	-do.-	
	30 10 00 CB 06 02 30	Rubber Bush	ゴムブッシュ	for fixing lamp	
		Panel 8			
	30 10 00 NB 03 46 00	Preset Assembly	プリセット Ass'y		
86	40 10 00 HQ 30 00 90	Slibe Volume B-200 (NON Click,Short Lever)	チューニングSK,PK用	TUNING,SK,PK	
87	40 10 00 HQ 30 02 00	-do.- B-500 (-do.-)	チューニングUK,LK用	-do.-, UK,LK	
88	40 10 00 HQ 30 00 60	-do.- B-10K (-do.-)	ウェーブモーション	WAVE MOTION	
89	40 10 00 KA 40 03 00	Slide Switch	オーバートーン用	Prest OVER TONE	
92	30 10 00 CB 02 52 60	Knob (Black)	ツマミ(黒)		
	30 10 00 BA 00 84 70	Preset Panel	プリセットパネル		
	30 10 00 AA 03 20 20	Preset Cover	プリセットカバー		
		Panel 9			
80	40 10 00 KA 90 01 60	Preset Button 1	プリセットボタン1		
80	40 10 00 KA 90 01 70	-do.- 2	〃 2		
80	40 10 00 KA 90 01 80	-do.- 3	〃 3		
80	40 10 00 KA 90 01 90	-do.- 4	〃 4		
80	40 10 00 KA 90 02 20	-do.- C	〃 C		
85	40 10 00 KA 90 02 30	-do.- U	〃 U		
85	40 10 00 KA 90 02 40	-do.- L	〃 L		
85	40 10 00 KA 90 02 50	-do.- P	〃 P		
85	40 10 00 KA 90 02 60	-do.- S	〃 S		
85	40 10 00 KA 90 02 70	-do.- R	〃 R		
96	40 10 00 JB 00 01 20	Miniature Lamp 12V	超小型ランプ		
	30 10 00 CB 00 91 80	Lamp Holder	ランプホルダー		
	40 10 00 KA 60 00 00	Micro Switch (for Preset Button)	マイクロスイッチ		
97	40 10 00 KA 60 01 50	Initial Clear Button	イニシャル・クリアーボタン	Located beside KAU C,board	
98	40 10 00 KA 40 02 10	Slide Switch for 7-8 notes sound selection	7音 8音 切換SW	-do.-	

3. Pedal Keybord & Components (ペダル鍵盤関係部品)

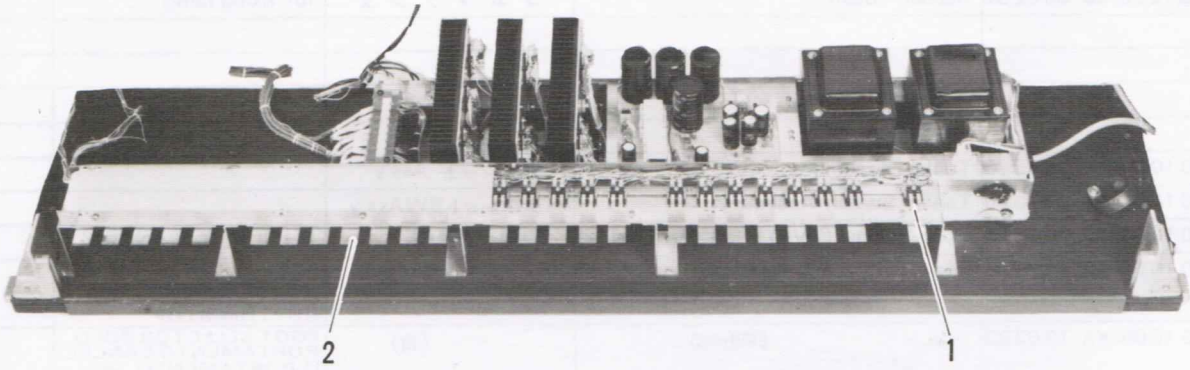

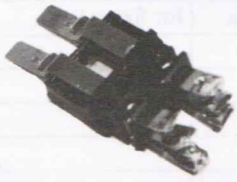

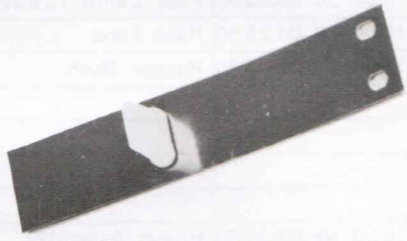

Ref. No.	Part No.	Description (部品名)		Remarks	Substitution
	30 10 00 NB 03 44 80	Pedal Keyboard Assembly	PK鍵盤本体		
	30 10 00 DB 01 30 70	White Key Arm	白鍵アーム		
	30 10 00 DB 00 52 10	Black Key Arm	黒鍵アーム		
	30 10 00 CB 01 20 10	Black Key Head	黒鍵ヘッド		
	30 10 00 AA 03 31 30	Actuator for White Key	アクチェター(白鍵)		
	30 10 00 AA 03 58 90	Actuator for Black Key	〃 (黒鍵)		
	30 10 00 CB 01 22 70	Actuator Rubber	駆動子ゴム		
	30 10 00 AA 01 34 60	Spring Plate	板バネ		
	40 10 00 EE 06 09 00	Oval head Screw 6×90	丸小ネジ		
	40 10 00 EV 20 00 60	Flat Washer 6S	平座金		
	40 10 00 EV 10 00 60	Hexagonal Nut 6S	六角ナット		
	40 10 00 EV 30 00 60	Spring lock Washer 6S	バネ座金		
	40 10 00 EB 06 04 00	Oval head Screw 6×40	皿小ネジ		
	40 10 00 EV 43 00 50	Toothed lock Washer 6S	歯付座金		
	40 10 00 EB 03 05 00	Oval head Screw 5×30	皿小ネジ		
	40 10 00 EV 10 00 50	Hexagonal Nut 5S	六角ナット		
	30 10 00 AA 03 31 50	Joint hook. (left)	コーナー金具(左)		
	30 10 00 AA 03 31 60	—do.— (right)	〃 (右)		
	30 10 00 AA 00 56 30	Guide pin	ガイドピン		
	30 10 00 NB 03 45 10	Pedal Key Switch Assembly	PKSW Ass'y		
2	30 10 00 NB 98 19 10	Pedal Key Spring Plate	駆動バネ		
1	30 10 00 NB 03 69 80	Switch Assembly	PKスイッチアッセンブリー		

4. Knee Lever, Touch Vibrato, Expression Pedal, Reverb Unit & Tone Cabinet Connector (ニーレバーその他)

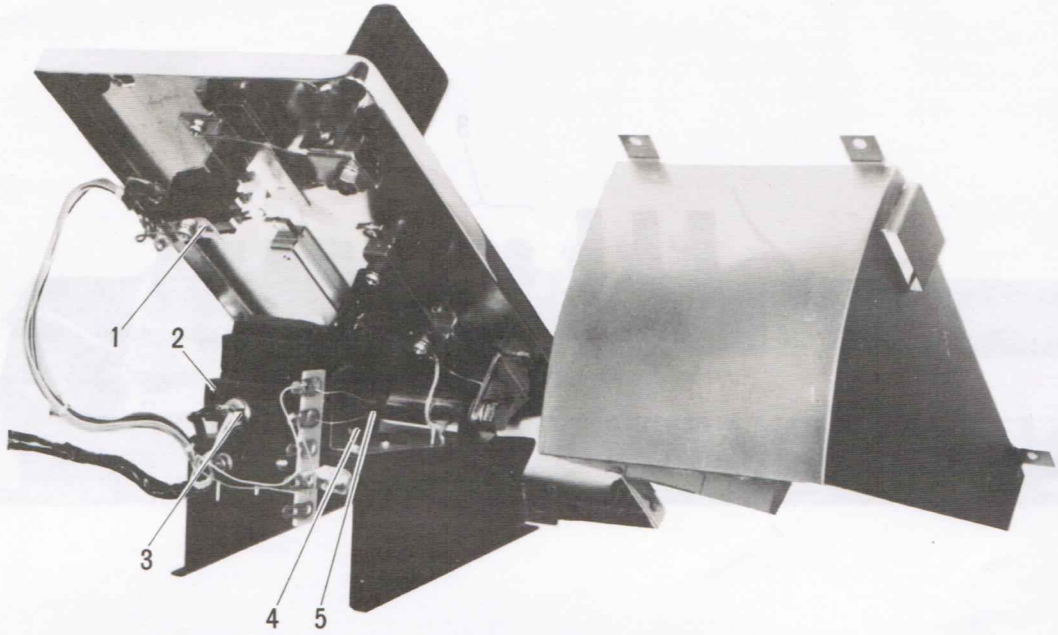

Ref. No.	Part No.	Description (部品名)		Remarks	Substitution
	30 10 00 NB 03 45 70	Knee Lever Assembly	ニーレバー Ass'y		
	30 10 00 NB 03 55 30	Knee Lever Unit	ニーレバーユニット		
	30 10 00 KA 02 70 30	Knee Lever Switch	ニーレバーSW		
	30 10 00 NA 00 89 10	VD Circuit Board	VDシート		
	30 10 00 NA 02 96 00	KN Circuit Board	KNシート		
	30 10 00 AA 01 26 50	Knee Lever Spring	スプリング		
	30 10 00 BB 00 13 70	Shutter Plate	シャッター板		
	30 10 00 NB 03 34 70	Touch Vibrato pick-up Assembly	TVピックアップAss'y		
	40 10 00 iK 00 00 10	Cds	Cds		
	30 10 00 CB 00 90 70	Holder (for Cds)	Cdsホルダー		
	40 10 00 JB 00 01 70	Lamp 24V 5w	ランプ		
	30 10 00 CB 00 90 80	Holder (for Lamp)	ランプホルダー		
	30 10 00 BB 00 21 80	Shutter Plate	シャッター板		
	30 10 00 NB 03 35 50	EXP Pedal	EXPペダル		
4	40 10 00 iK 00 00 20	Cds	Cds		
5	30 10 00 CB 00 76 30	Cds Holder	Cdsホルダー		
3	40 10 00 JB 00 01 70	Lamp 24V 5w	ランプ		
2	30 10 00 CB 00 76 20	Cover (for Lamp)	ランプカバー		
	30 10 00 CB 02 42 00	Mat (for EXP)	EXPペダルマット		
1	30 10 00 NB 00 75 10	Switch Assembly 2M(for Foot SW)			
1	30 10 00 NB 01 63 80	—do.— 2B			
	30 10 00 CB 01 91 00	EXP Pedal Guide (left)	EXP ガイド (左)		
	30 10 00 CB 01 91 10	—do.— (right)	〃 (右)		
	30 10 00 NB 01 66 20	Reverb Unit	リバーブユニット	➡JH00002	
	40 10 00 LB 60 00 50	US Connector Socket	USコネクターソケット	Tone Cabinet Signal Out put Socket	
	40 10 00 LB 30 00 70	Phone Jack	ホーンジャック	External Reverb Connector	
	30 10 00 CB 06 20 10	Nut (Phone Jack)	ホーンナット		
	40 10 00 KA 40 01 10	Slide Switch	T.C セレクターSW		
	30 10 00 AA 03 20 60	Chassis for Tone Cabinet (left)	T.Cシャーシ (左)		
	30 10 00 AA 03 20 70	—do.— (right)	〃 (右)		

5. Power Supply (電源関係)

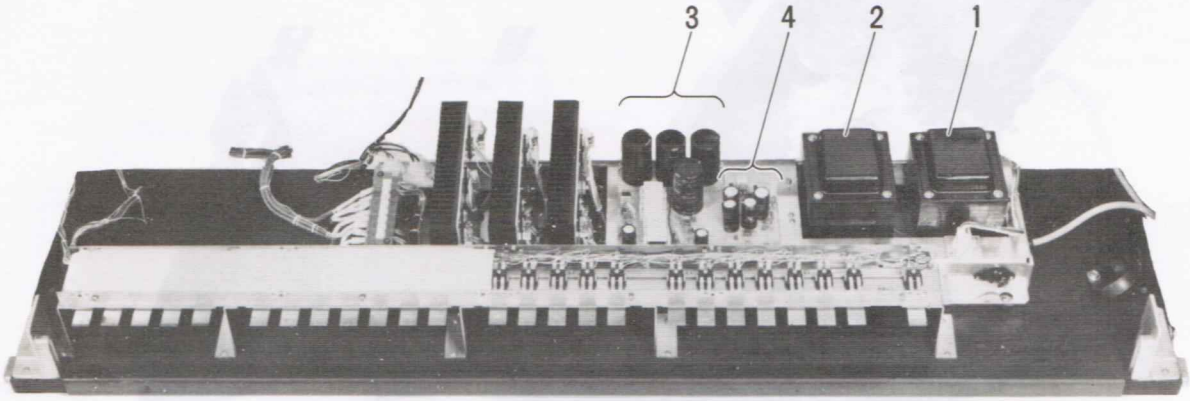

Ref. No.	Part No.	Description (部品名)		Remarks	Substitution
	30 10 00 NB 03 48 20	DC Power Supply Unit	電源ユニット		
	30 10 00 NB 03 48 30	—do.— U.S.A & Canadian Models	〃		
	30 10 00 NB 03 48 40	—do.— Australian Models	〃		
	30 10 00 NB 03 48 50	—do.— South African & European Models	〃		
	30 10 00 NB 03 48 60	—do.— General Models	〃		
	30 10 00 NB 03 48 70	—do.— North European Models	〃		
1	40 10 00 GA 02 53 00	Power Transformer	電源トランス		
2	40 10 00 GA 02 52 00	—do.—	〃		
3	40 10 00 FM 05 94 70	Electrolytic capacitor 4700μ/50V			
4	40 10 00 FJ 25 91 00	—do.— 1000μ/35V			
		The component parts used in PU circuit board are described in page 3 to 6.			

6. Cabinet（外装関係部品）

Ref. No.	Part No.	Description（部品名）		Remarks	Substitution
	30 10 00 CB 02 47 00	Music rest	譜面板		
1	30 10 87 08 14 65 20	(UK)	トーンシート収納蓋		
2	30 10 87 08 14 65 21	(LK)	〃		
4	30 10 87 08 14 65 22	(PK)	〃		
5	30 10 87 08 14 65 23	(SK)	〃		
3	30 10 87 00 04 13 00	Top Board Radiation Hole	屋根放熱孔		
6	30 10 87 08 14 55 10	End Block (UK.LEFT)	UK拍子木（左）		
7	30 10 87 08 14 55 20	—do.— (UK.RIGHT)	〃（右）		
8	30 10 87 08 14 55 30	—do.— (LK.LEFT)	LK拍子木（左）		
9	30 10 87 08 14 55 40	—do.— (LK.RIGHT)	〃（右）		
10	30 10 87 08 14 56 10	—do.— (SK.LEFT)	SK拍子木（左）		
11	30 10 87 08 14 56 20	—do.— (SK.RIGHT)	SK拍子木（右）		

7. Rack Supporter and Connector

1

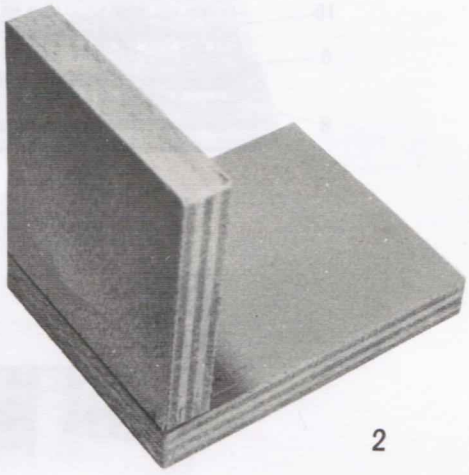

2

Ref. No.	Part No.	Description (部品名)		Remarks	Substitution
1	40 10 00 LB 60 04 50	80 pins Connector	80ピンコネクター	Mother board,TBU,TTBL,TBP,KAS C,board	
2	~~40 10 00 LB 60 04 50~~	Rack Supporter		for repair work	